# Assembly Instructions

## Snap & Grow 6'x8'

2550x1910x2070mm / 100.3"x75.2"x81.5"

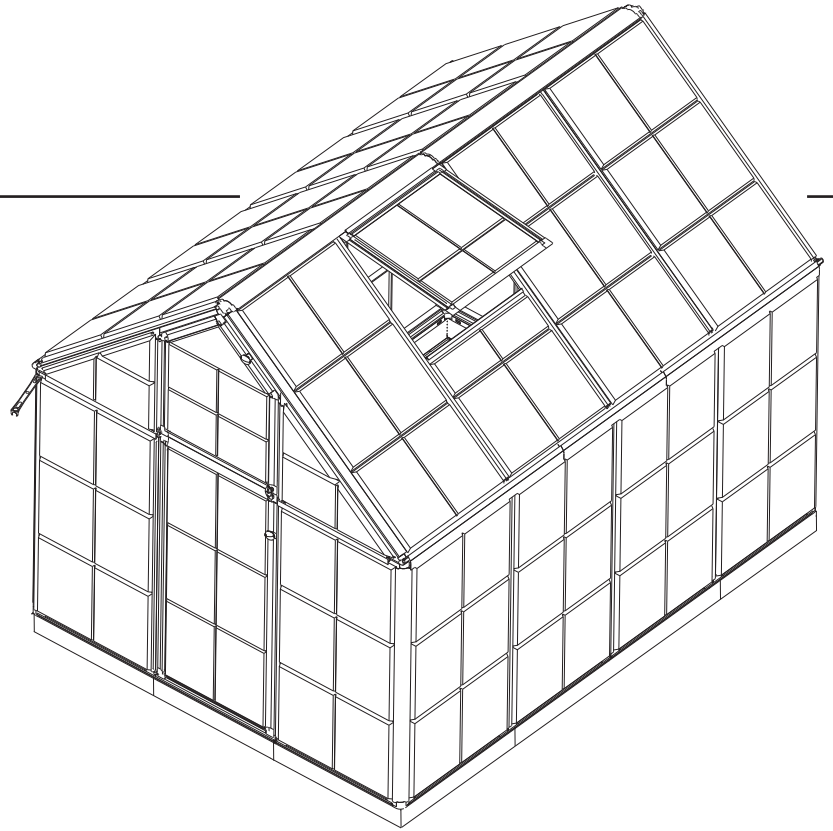

English - 68803

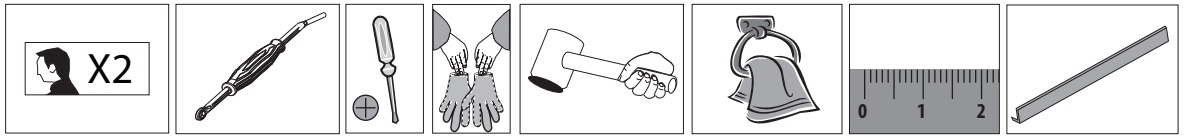

## IMPORTANT

Please read these instructions carefully before you start to assemble this greenhouse.

Please carry out the steps in the order set out in these instructions.

Keep these instructions in a safe place for future reference.

## Safety Advice

We strongly recommend the use of work gloves during assembly . Do not attempt to assemble the greenhouse in windy or wet conditions.
Do not touch overhead power cables with the aluminum profiles. Always wear shoes and safety goggles when working with extruded aluminum. Dispose of all plastic bags safely - keep them out of reach of small children. The greenhouse must be positioned and fixed on a flat level surface. Do not lean against or push the greenhouse during construction. Keep children away from the assembly area. Do not position your greenhouse in an area exposed to excessive wind.

Do not attempt to assemble this greenhouse if you are tired, have taken drugs or alcohol or if you are prone to dizzy spells. If using a step ladder or power tools ensure that you follow the manufacturers safety advice. Hot items such as recently used grills, blowtorches etc. must not be stored in the greenhouse. Ensure there are no hidden pipes or cables in the ground before inserting the pegs.

## General Advice

This is a multi-part assembly best achived by two people. Allow at least half a day for assembly process.
Selecting a site - choose a sunny level position away from overhanging trees. If you are fixing your greenhouse directly to a solid concrete foundation use the pre drilled holes in the metal base supplied. The component parts should be checked and laid out close at hand. Keep all small parts (screws etc.) in a bowl so they do not get lost.

## Care & Maintenance

When your greenhouse needs to be cleaned, use a mild detergent solution and rinse with cold clean water. DO NOT use acetone, abrasive cleaners or other special detergents to clean the clear panels.
Replacement parts - call our service line. For additional information please visit our web site: www.palram.com

## Tools & Equipment

- Tape measure
- Work gloves
- Plastic or rubber mallet
- Phillipshead screwdriver
- Step ladder
- Drill bit
- Large hammer
- Scissors
- Steer level - For base alignment
- Cloth

- Sort the parts and check against the contents parts list.
- Carry out the assembly steps in the order set out in the instructions.
- The front of the greenhouse is the wall including the door, and the back is the opposite wall.
- Firmly connect the greenhouse to a leveled final position immediately after completion of the assembly using the provided 8 pegs .

## Notes (by steps)

### step 3

Profile 821 should be placed on the left hand side to be connected to profile 822. Profile 821 is the one with the connector at the end.

### step 4

After connecting profiles 816 to each other clean the connection area using a cloth. place the sticker on the connection only when it is clean and dry follow the sticker from one side of the connection to the other as mentioned picture 4.

### step 7

Profile 800 & 801 should be aliened and connected according to the illustration on page 7 a & b. plug 23 should be inserted to each connection while the two dots on the front of the plug should be in horizontal position for easy assembly.

### step 8

Use part 95 as a template in order to masure the gap between posts 800 & 801.

### step 10

Profile 806 should be placed on the right hand side. Profile 805 should be placed on the left hand side.

### step 11

Slide the panel 550 till the end of the rail as shown on illustration c the panel.

### step 12

Profile 808 should be placed on the right
Profile 807 should be placed on the left
Profile 803 should be placed on the left
Profile 804 should be placed on the right.

### step 16

Be careful to assemble the window in the connect position as shown on picture 15 a. profile 809 should placed while the vent is closed to cover the gap.

### step 19

See picture no. 11 for glazing the panels on the bottom.

### step 20

Go inside the greenhouse and turn all 23 plugs a 1/4 of a turn clockwise.

### step 21

Profiles 814 should be inserted to both ends of the greenhouse. after that insert profile 815 in between them.

### step 23

You should tight screw 97 when profiles 807 & 808 aliened and connected.

### step B2

bend the tab lock from the inside. after bending the base it will be use as an out using screw 447

# Contents

| Item | mm/Inc | Qty. |
|---|---|---|
| 800 | 1125mm/44.3” | x 6 |
| 801 | 1128mm/44.40” | x 6 |
| 802 | 1145mm/45” | x 2 |
| 803 | 460mm/18” | x 1 |
| 804 | 460mm/18” | x 1 |
| 805 | 1145mm/45” | x 1 |
| 806 | 1145mm/45” | x 1 |
| 807 | 460mm/18” | x 1 |
| 808 | 460mm/18” | x 1 |
| 809 | 556mm/21.8” | x 1 |
| 810 | 560mm/22” | x 1 |
| 811 | 530mm/20.85” | x 2 |
| 812 | 530mm/20.85” | x 2 |
| 813 | 1178mm/46.45” | x 4 |
| 814 | 897mm/35.4” | x 4 |
| 815 | 599mm/23.6” | x 2 |
| 816 | 1178mm/46.45” | x 2 |
| 817 | 1178mm/46.4” | x 4 |
| 818 | 1178mm/46.4” | x 2 |
| 819 | 579mm/22.8” | x 2 |
| 820 | 1137mm/44.76” | x 4 |
| 821 | 1130mm/51.2” | x 2 |
| 822 | 1130mm/51.2” | x 2 |
| 823 | 1153mm/454.4” | x 4 |
| 833 | 550mm/22” | x 2 |
| 834 | 854mm/33.6” | x 2 |

# Contents

| Item | | Qty. |
|---|---|---|
| 21 | | x 6 |
| 22 | | x 20 |
| 23 | | x 12 |
| 35 | | x 32 |
| 41 | | x 4 |
| 96 | | x 8 |
| 97 | | x 2 |
| 98 | | x 2 |
| 100 | | x 1 |
| 447 | 40mm | x11 |
| 450 | 50mm | x 3 |

| Item | | Qty. |
|---|---|---|
| 43 | | x 1 |
| 46 | | x 2 |
| 47 | | x 2 |
| 48 | | x 2 |
| 49 | | x 1 |
| 49 | | x 1 |

| Item | | Qty. |
|---|---|---|
| 25 | | x 2 |
| 26 | | x 2 |
| 28 | | x 2 |
| 29 | | x 3 |
| 40 | | x 1 |
| 44 | | x 1 |
| 99 | | x1 |

| Item | | Qty. |
|---|---|---|
| 550 | | x 20 |
| 551 | | x 2 |
| 552 | | x 2 |
| 553 | | x 1 |
| 554 | | x 1 |
| 555 | | x 1 |

| Item | | Qty. |
|---|---|---|
| 556 | | x 1 |
| 557 | | x 1 |
| 250 | 1260mm/49.6” | × 4 |
| 251 | 654mm/25.8” | × 2 |
| 252 | 1260mm/49.6” | × 2 |
| 95 | 568mm/22.3” | x 2 |

1

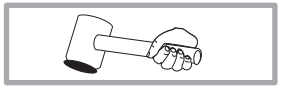

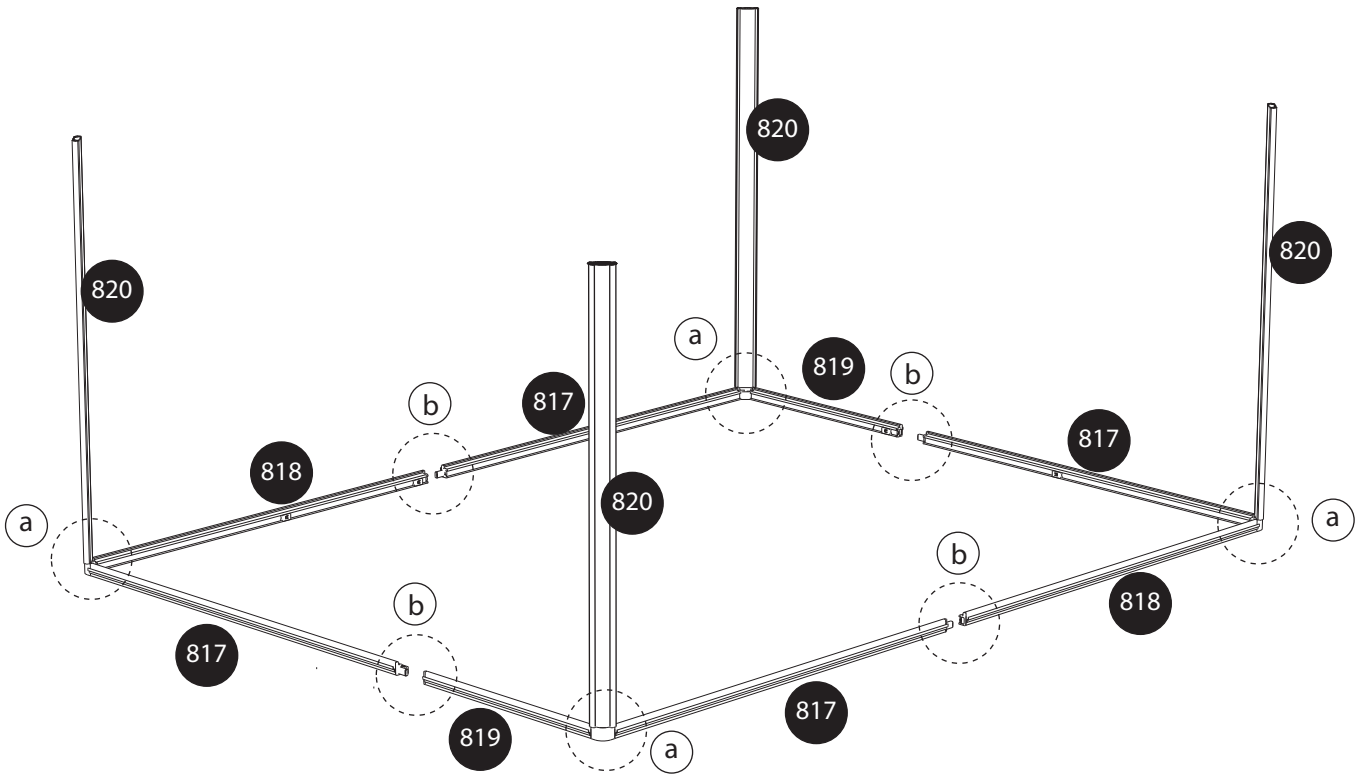


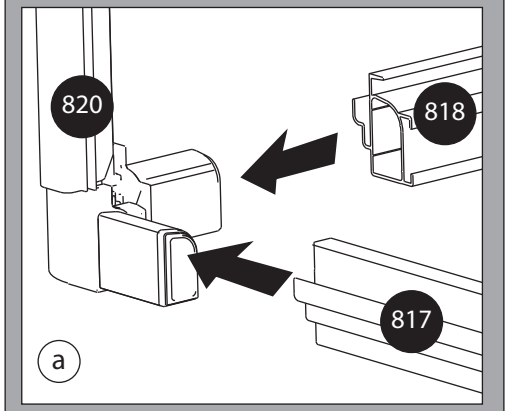


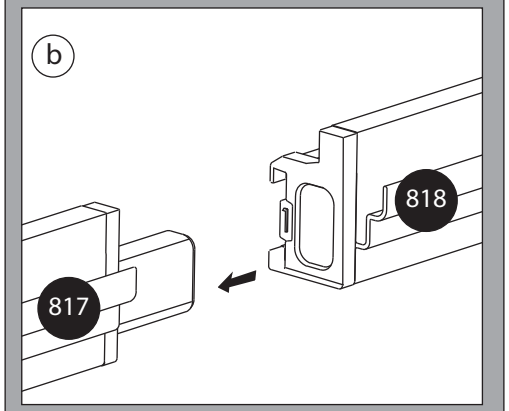


| | | |
|---|---|---|
| **817** | 1178mm/46.4” | x 4 |
| **818** | 1178mm/46.4” | x 2 |
| **819** | 579mm/22.8” | x 2 |
| **820** | 1137mm/44.76” | x 4 |

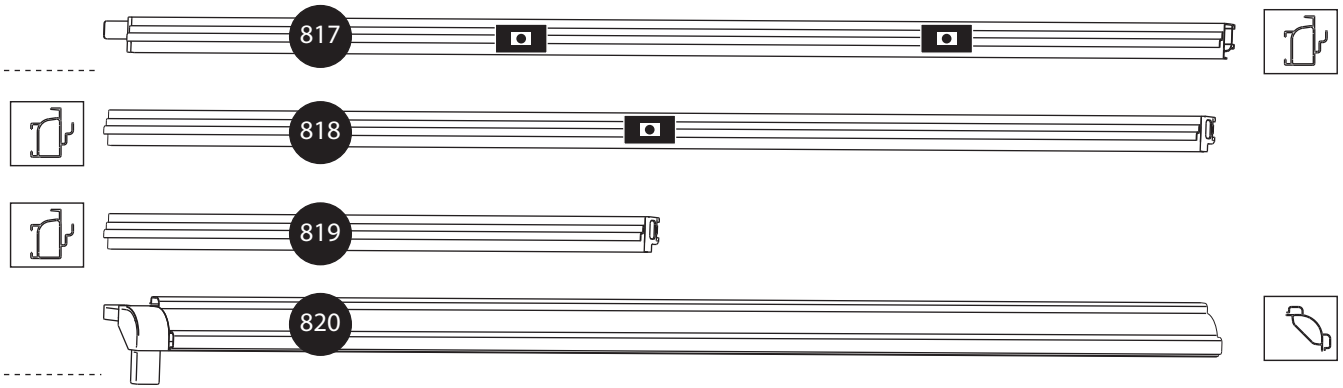

2

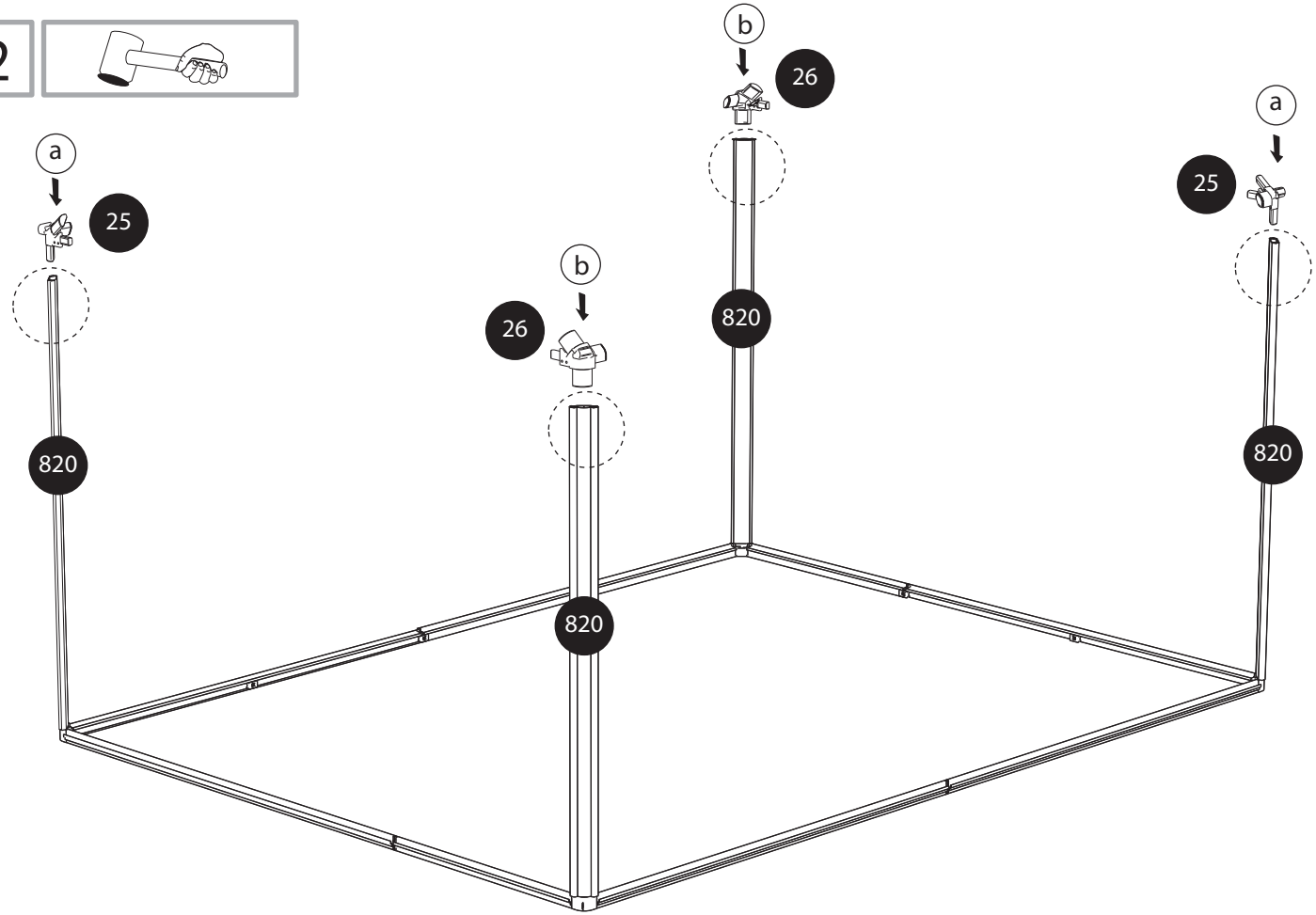


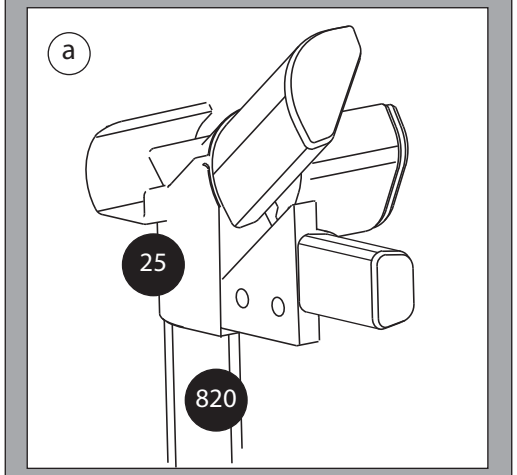


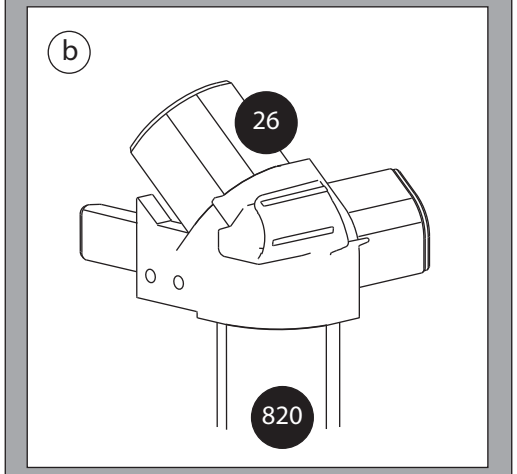


| | |
|---|---|
| **26** | x 2 |

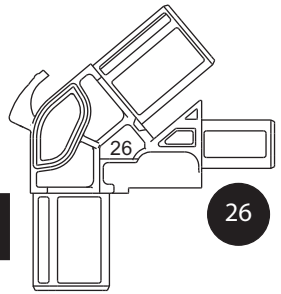


| | |
|---|---|
| **25** | x 2 |

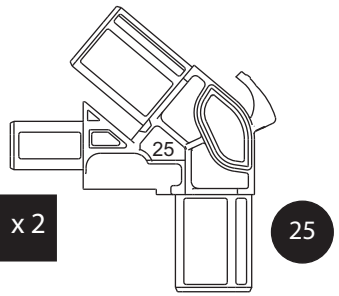

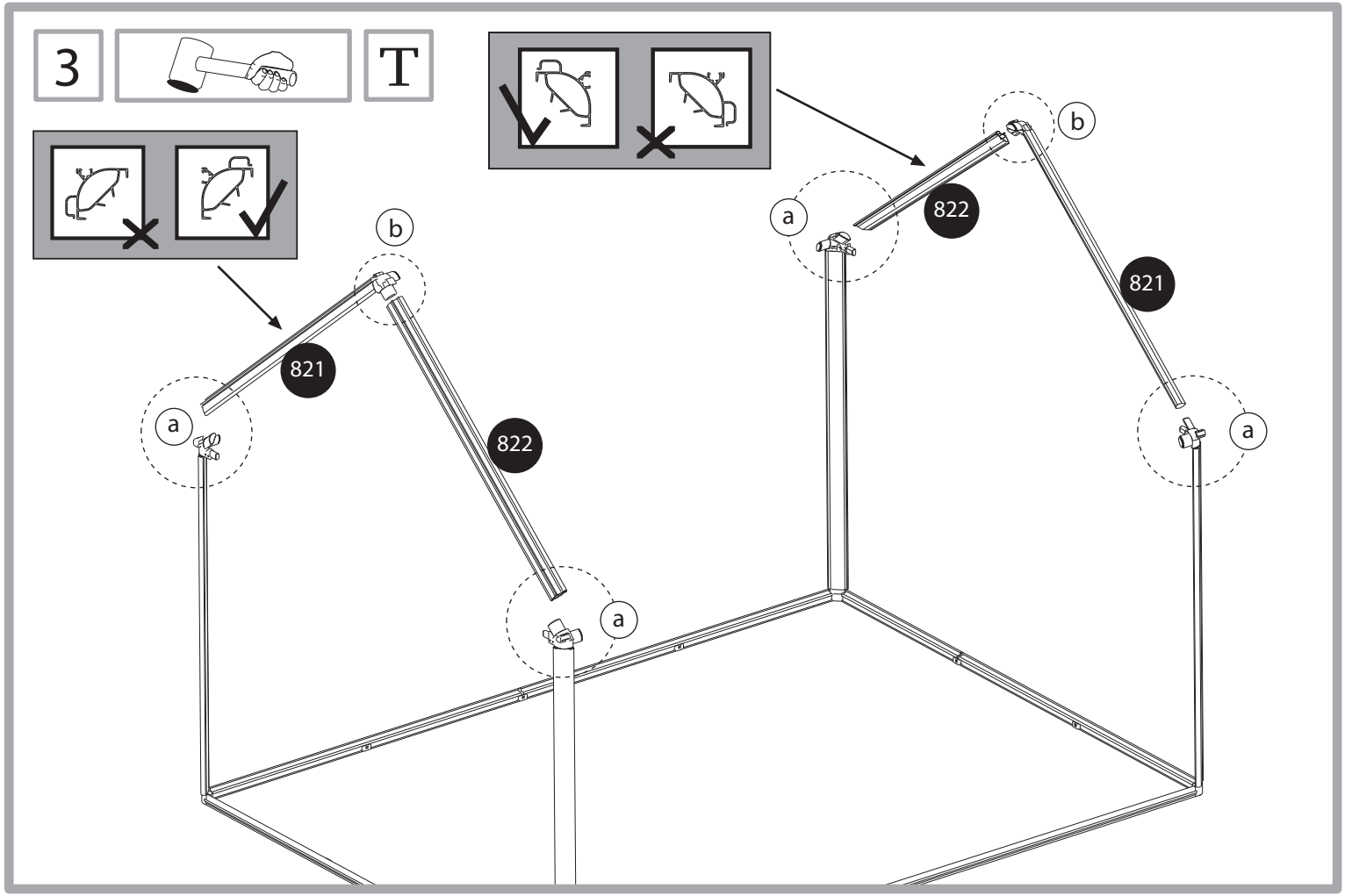


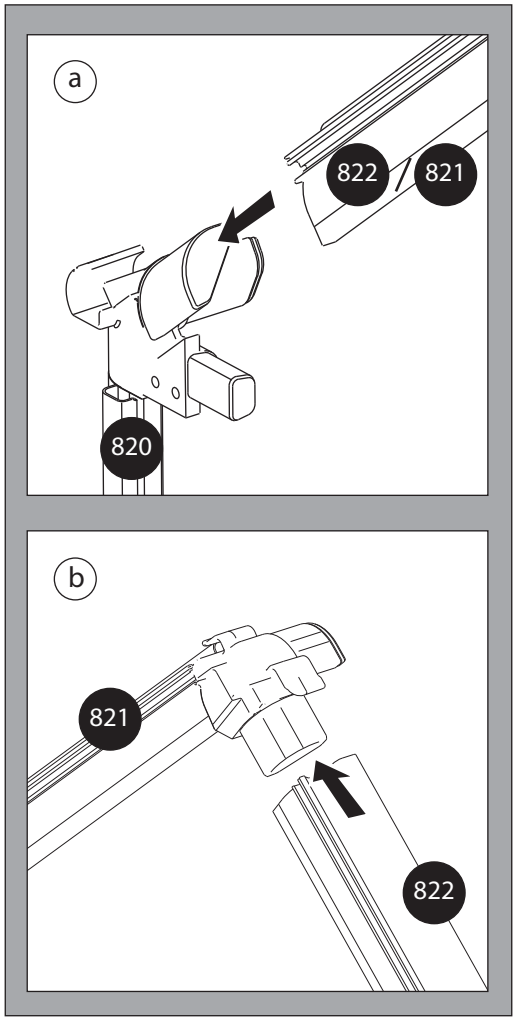


| | | |
|---|---|---|
| **821** | 1130mm/51.2” | x 2 |
| **822** | 1130mm/51.2” | x 2 |

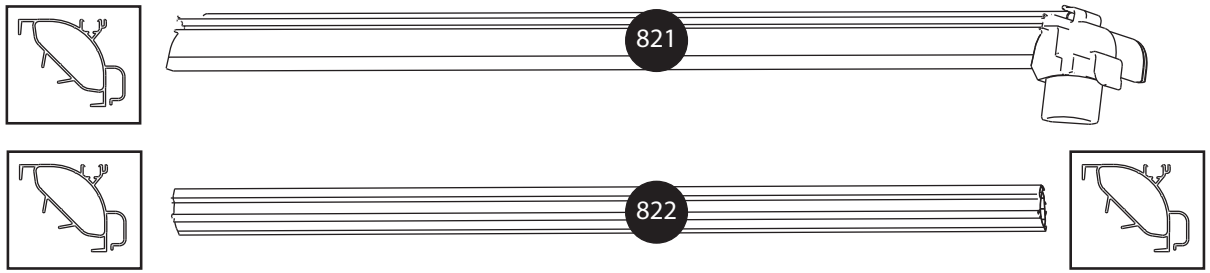

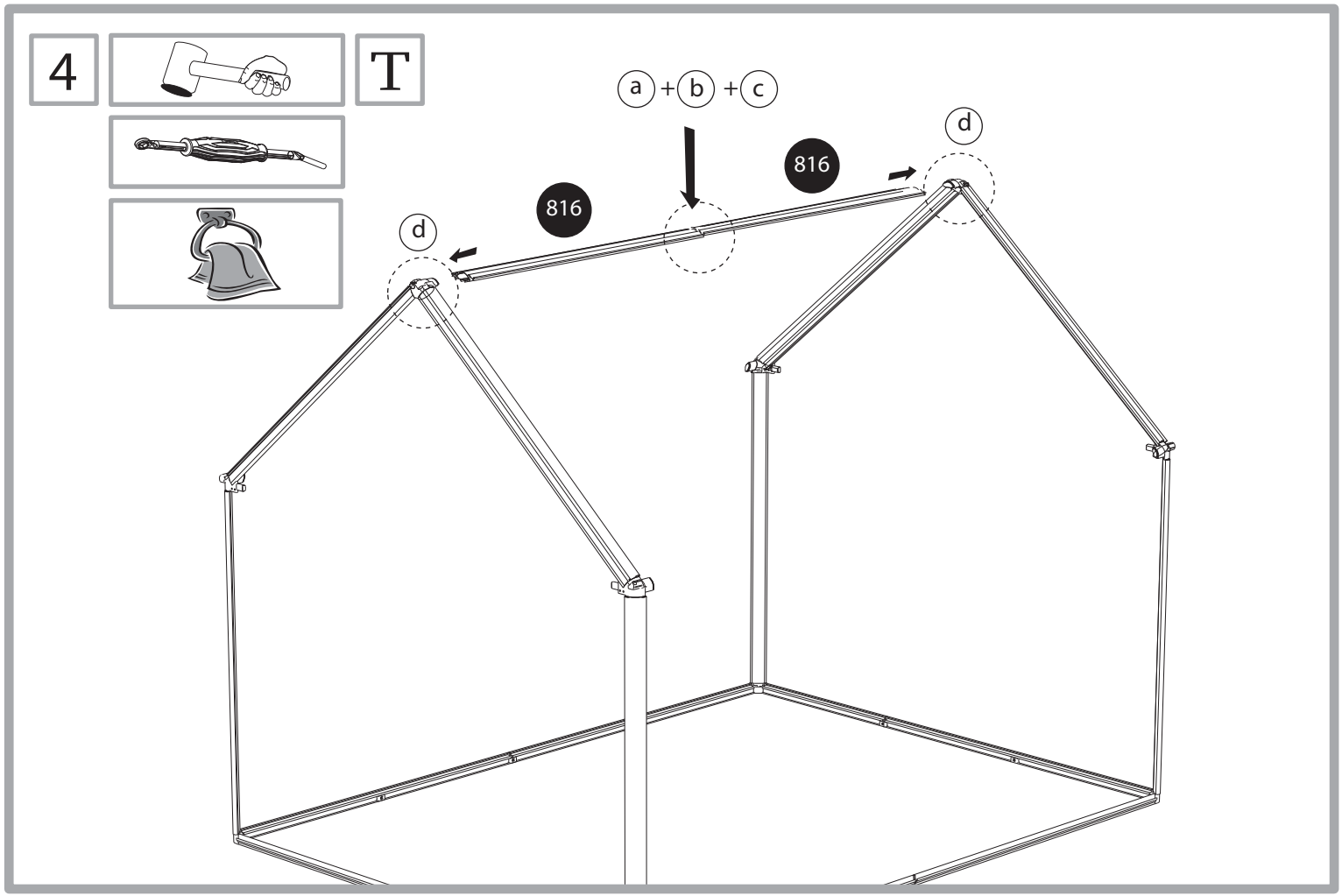


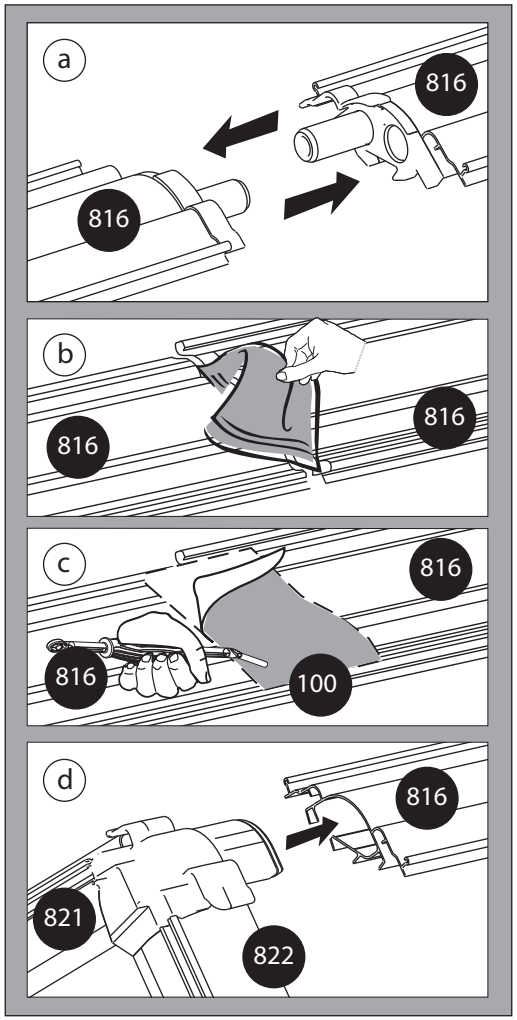


| | | |
|---|---|---|
| **816** 1178mm/46.45” | x 2 | |
| **100** | x 1 | |

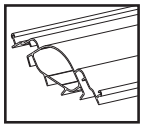

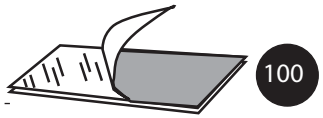

5

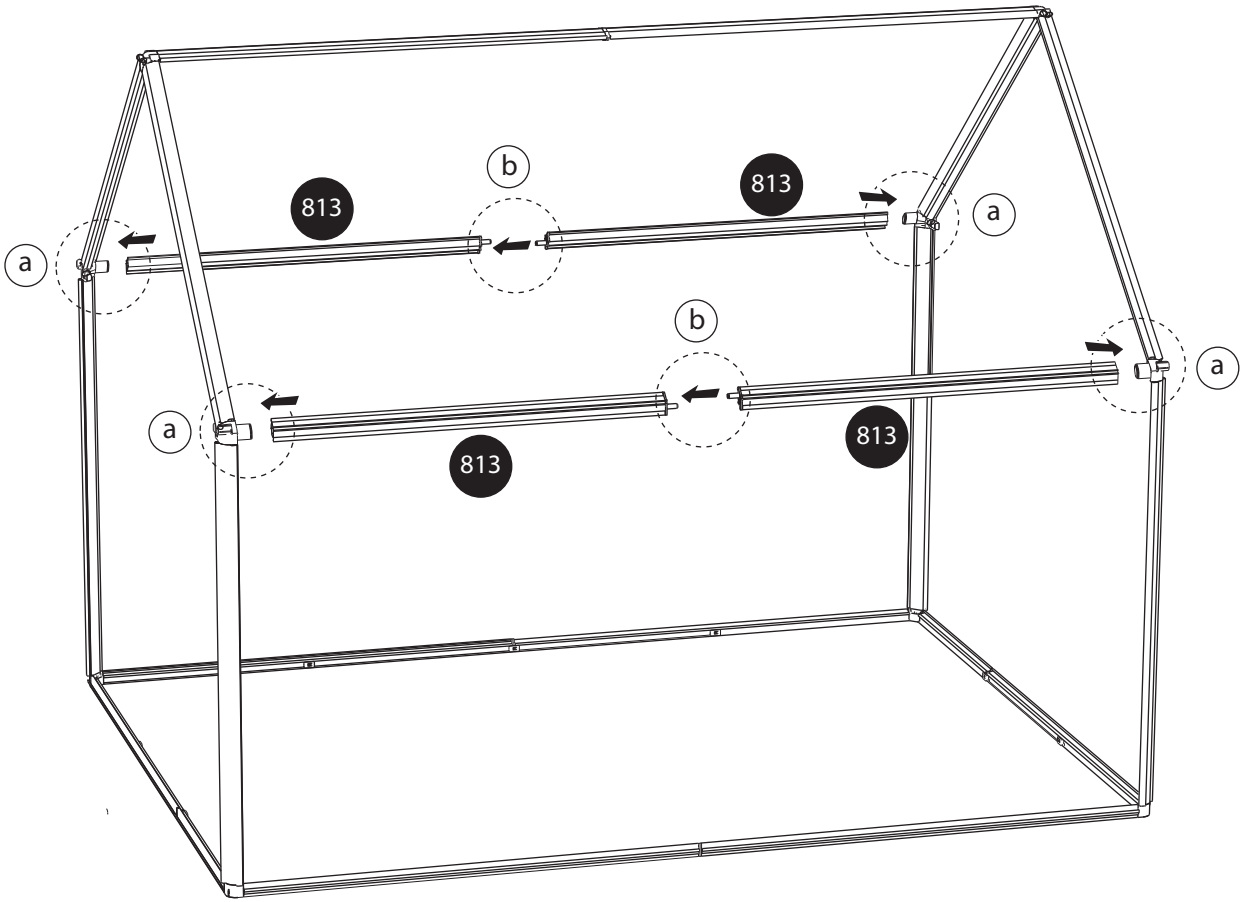


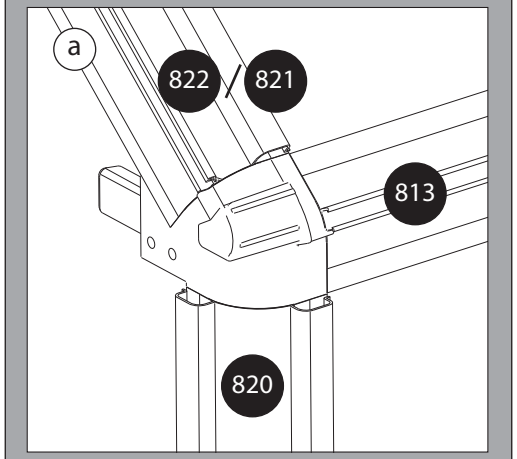


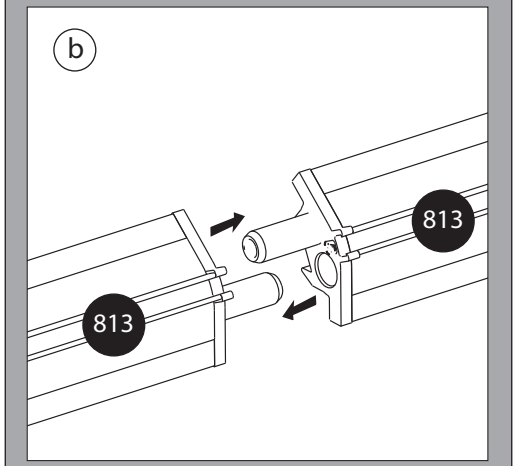


| | | |
|---|---|---|
| **813** | 1178mm/46.45” | x 4 |

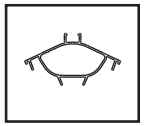

6

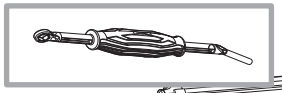

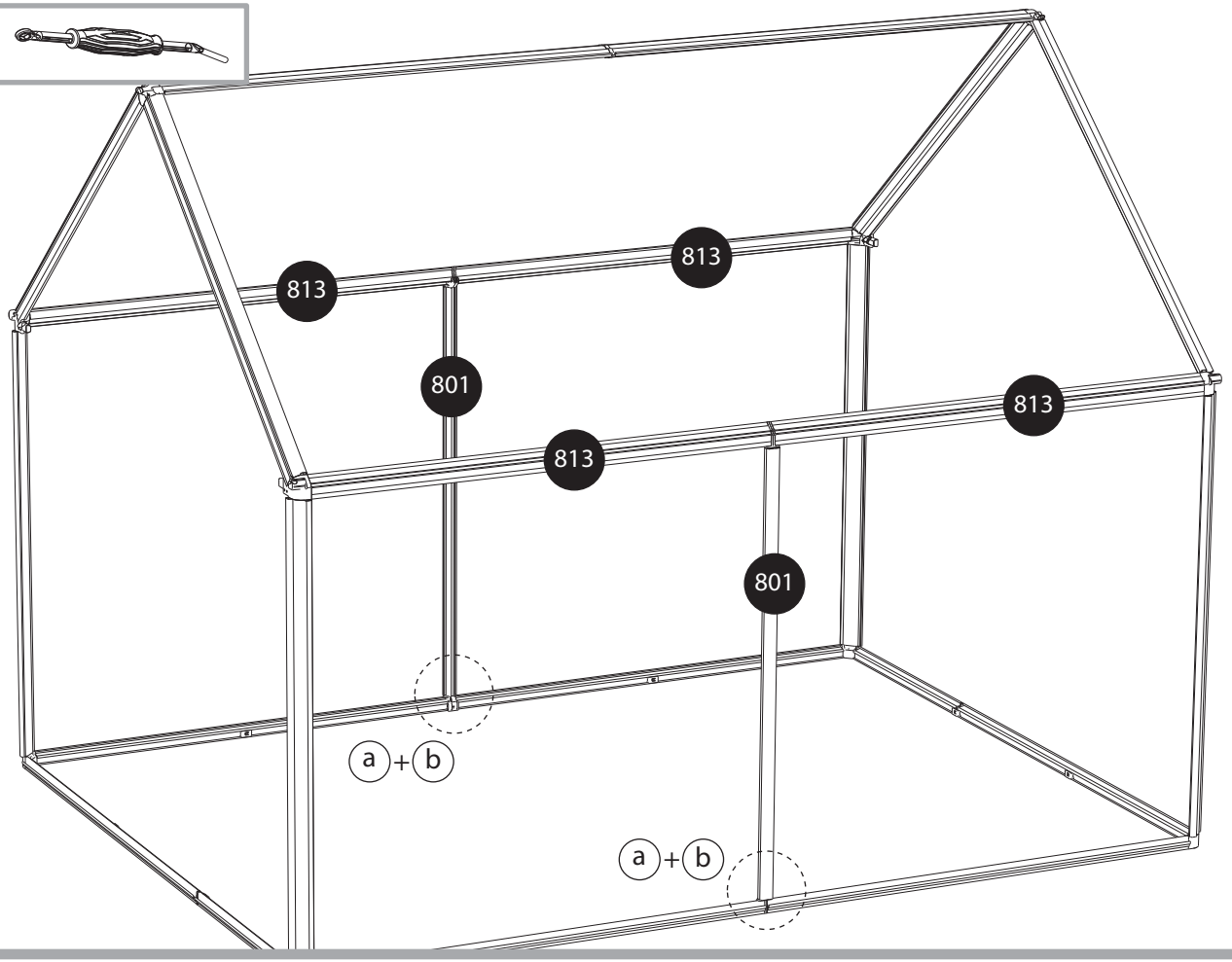


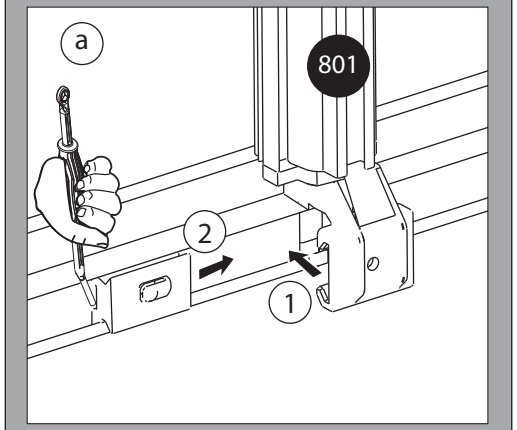


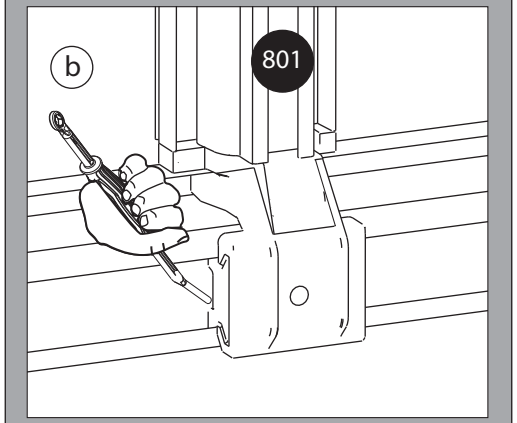


| | | |
|---|---|---|
| **801** | 1128mm/44.40” | x 2 |

7

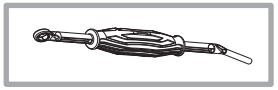

T

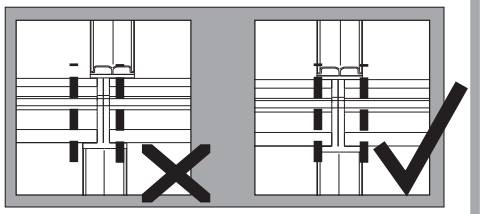

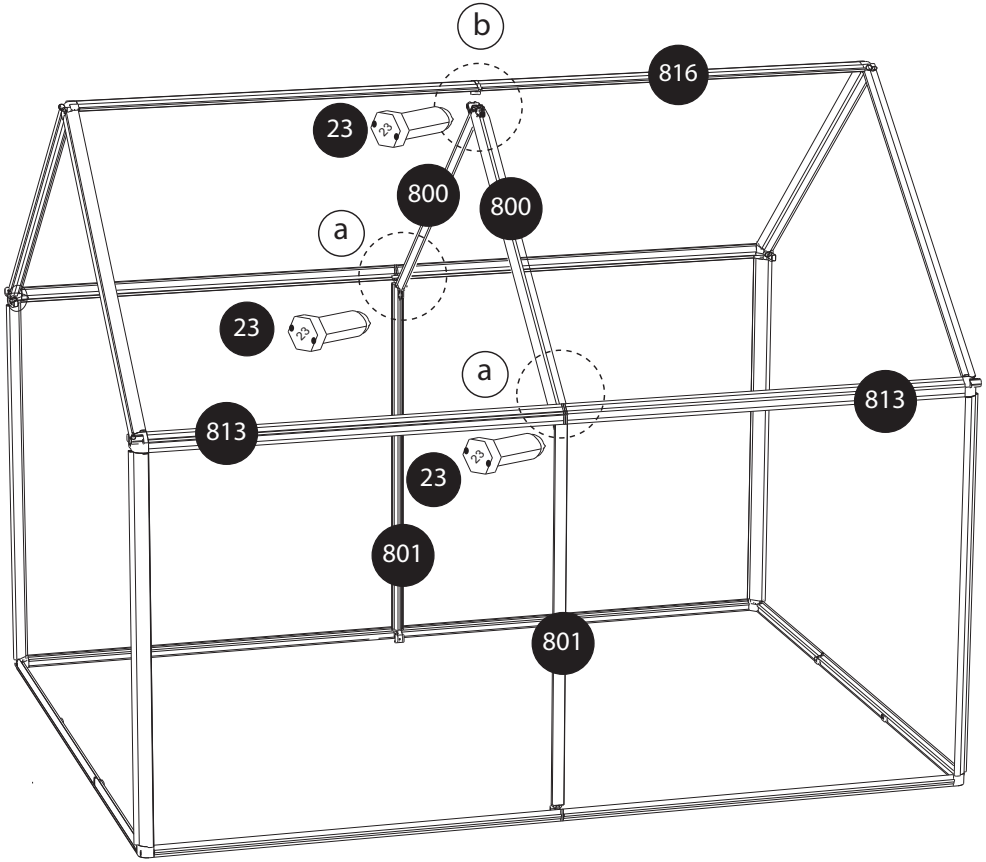


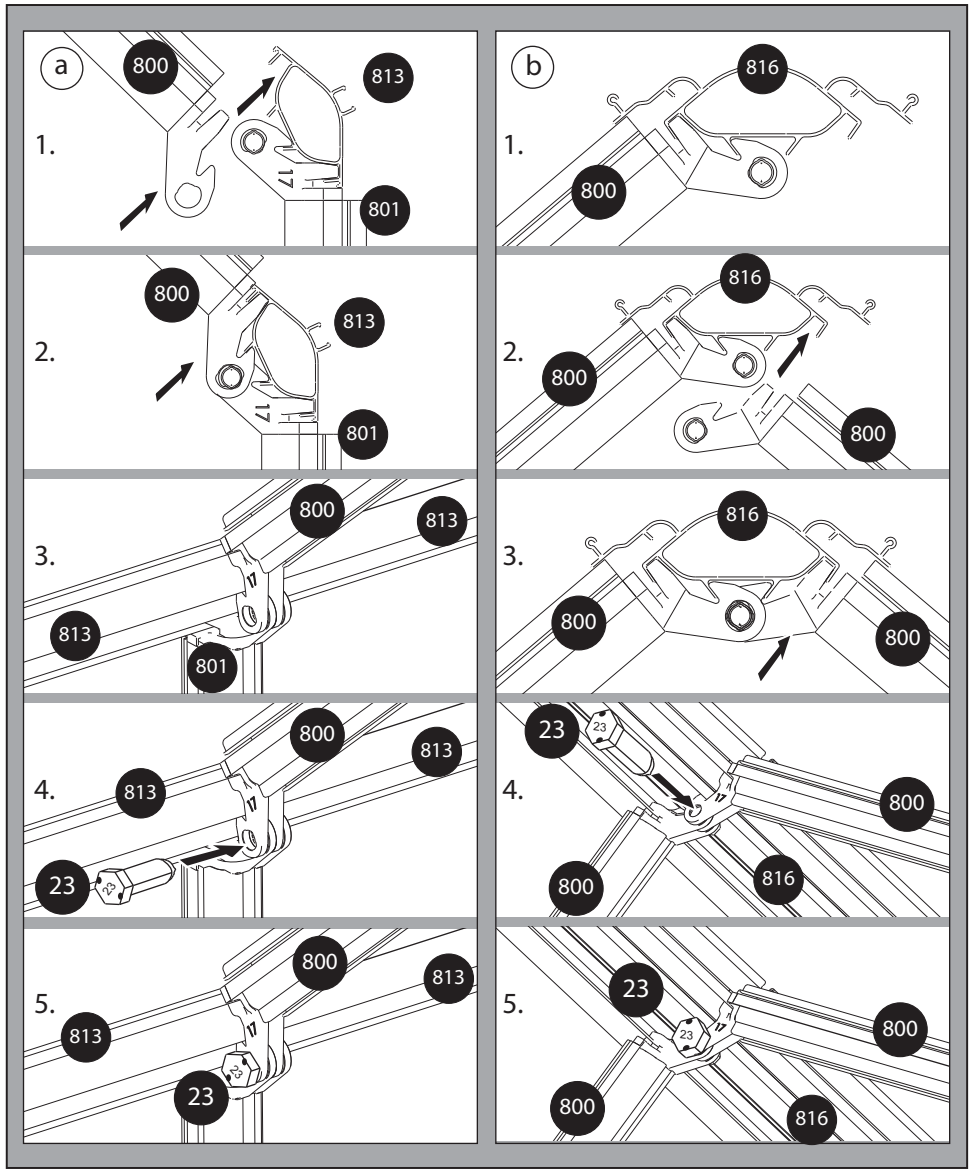


| | | |
|---|---|---|
| **800** | 1125mm/44.3” | x 2 |
| **23** | | x 3 |

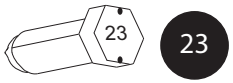

8

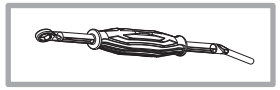

T

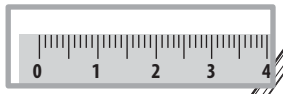

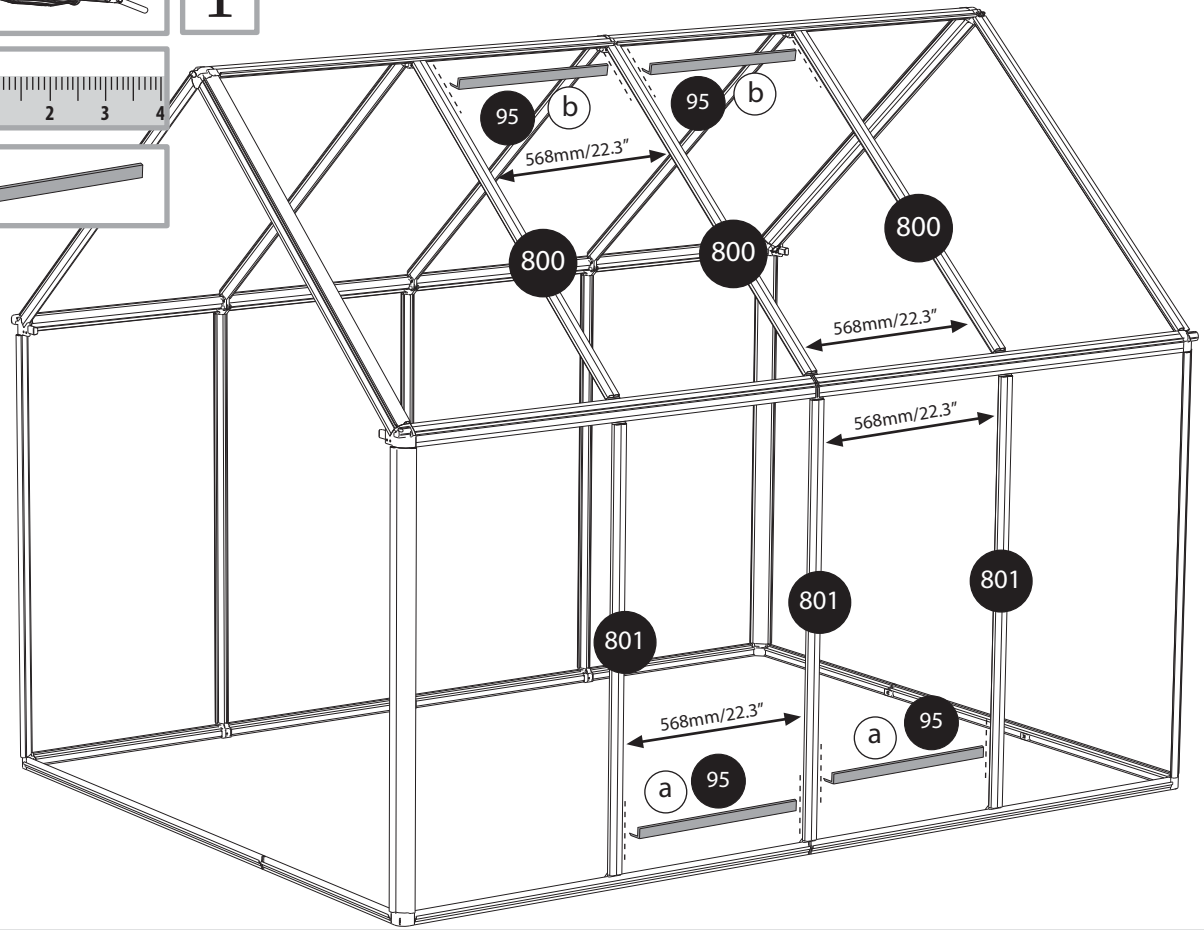


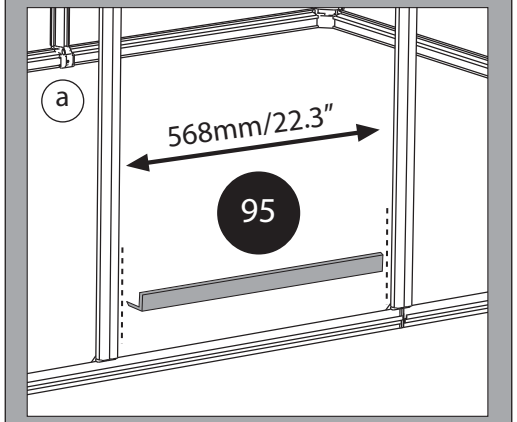


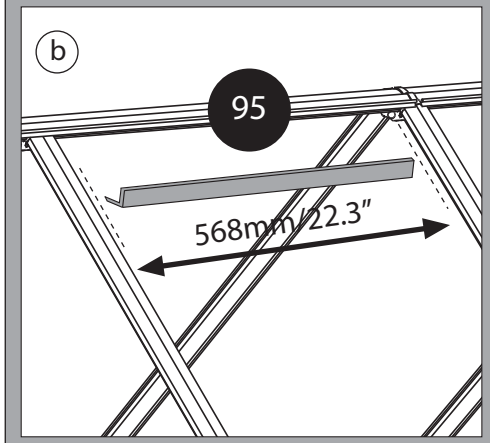


| | | |
|---|---|---|
| **95** | 568mm/22.3" | x 2 |
| **801** | 1128mm/44,40" | x 4 |
| **800** | 1125mm/44.3" | x 4 |

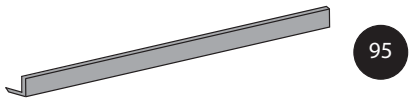

9

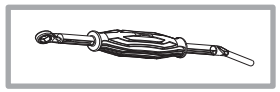

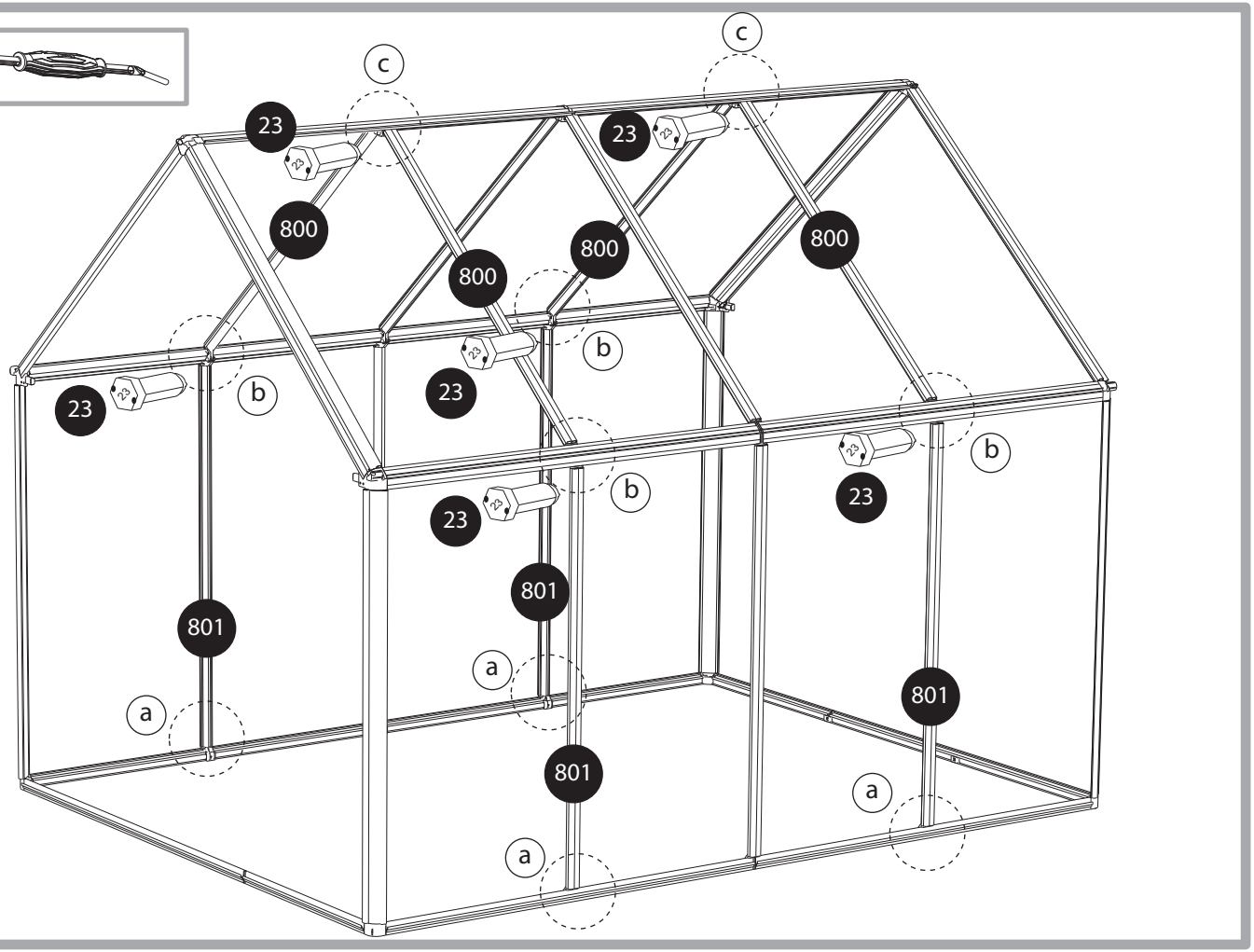


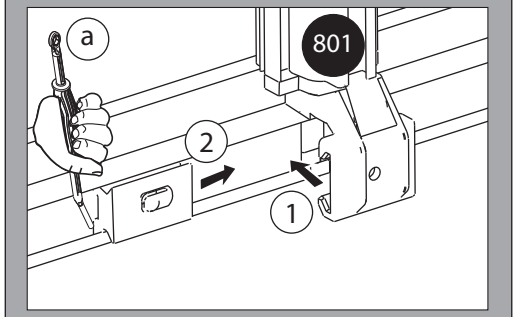


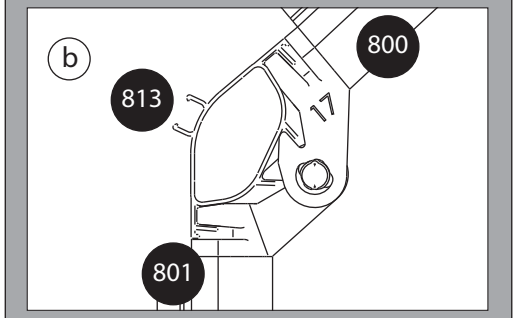


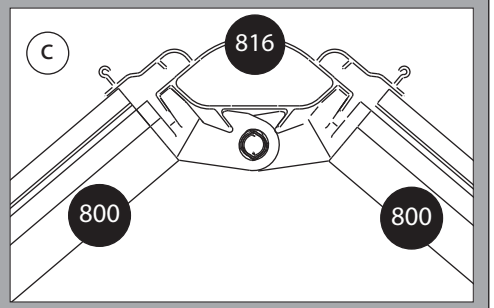


| | | |
|---|---|---|
| **801** | 1128mm/44,40” | x 4 |
| **800** | 1125mm/44.3” | x 4 |
| **23** | | x 6 |

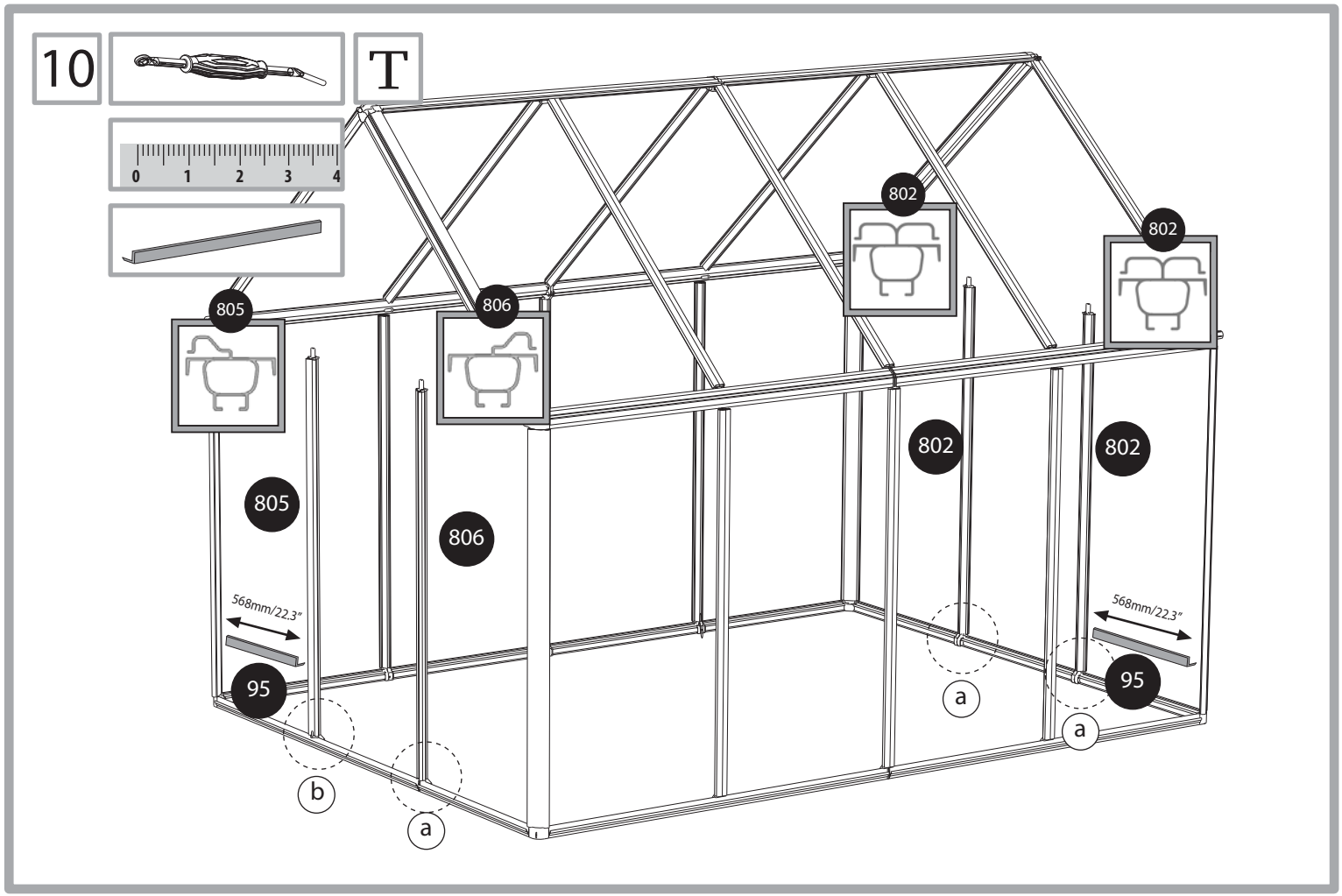


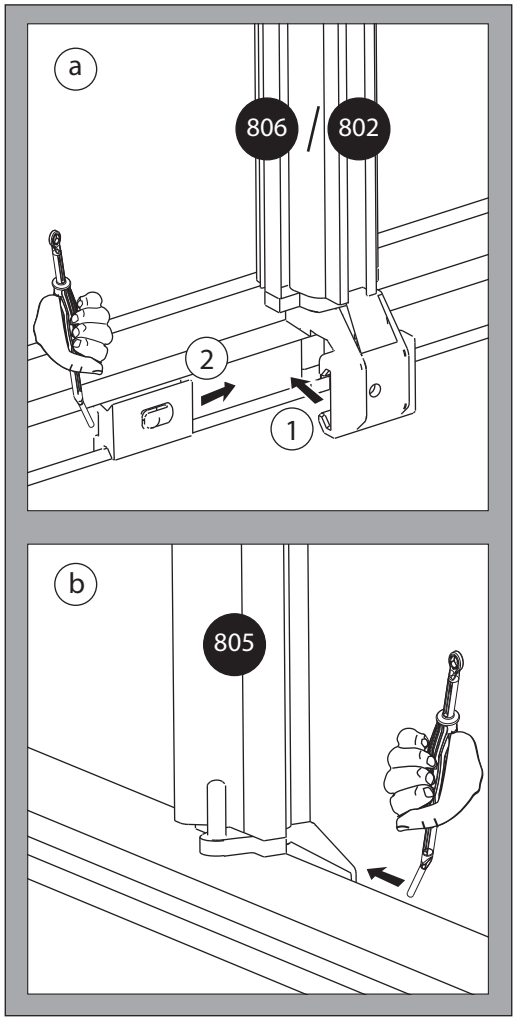


| | | |
|---|---|---|
| **805** | 1145mm/45" | x 1 |
| **806** | 1145mm/45" | x 1 |
| **802** | 1145mm/45" | x 2 |
| **95** | 568mm/22.3" | x 2 |

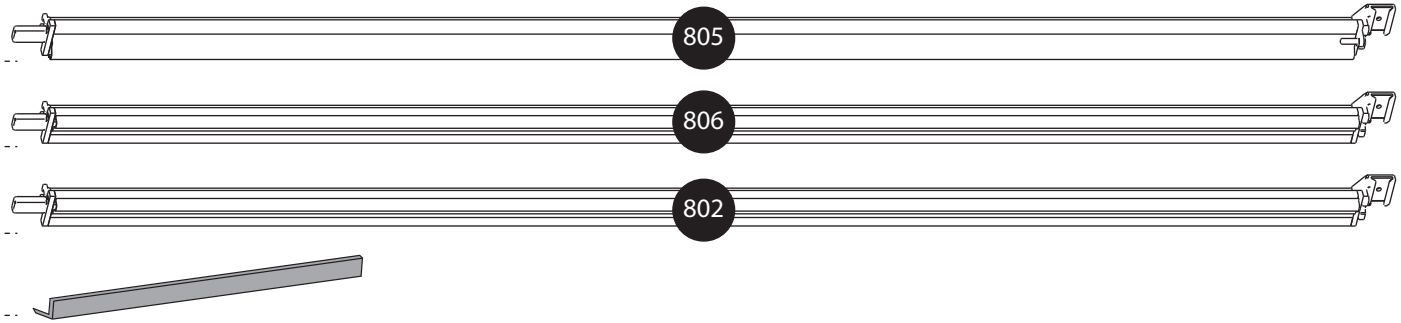

11 T

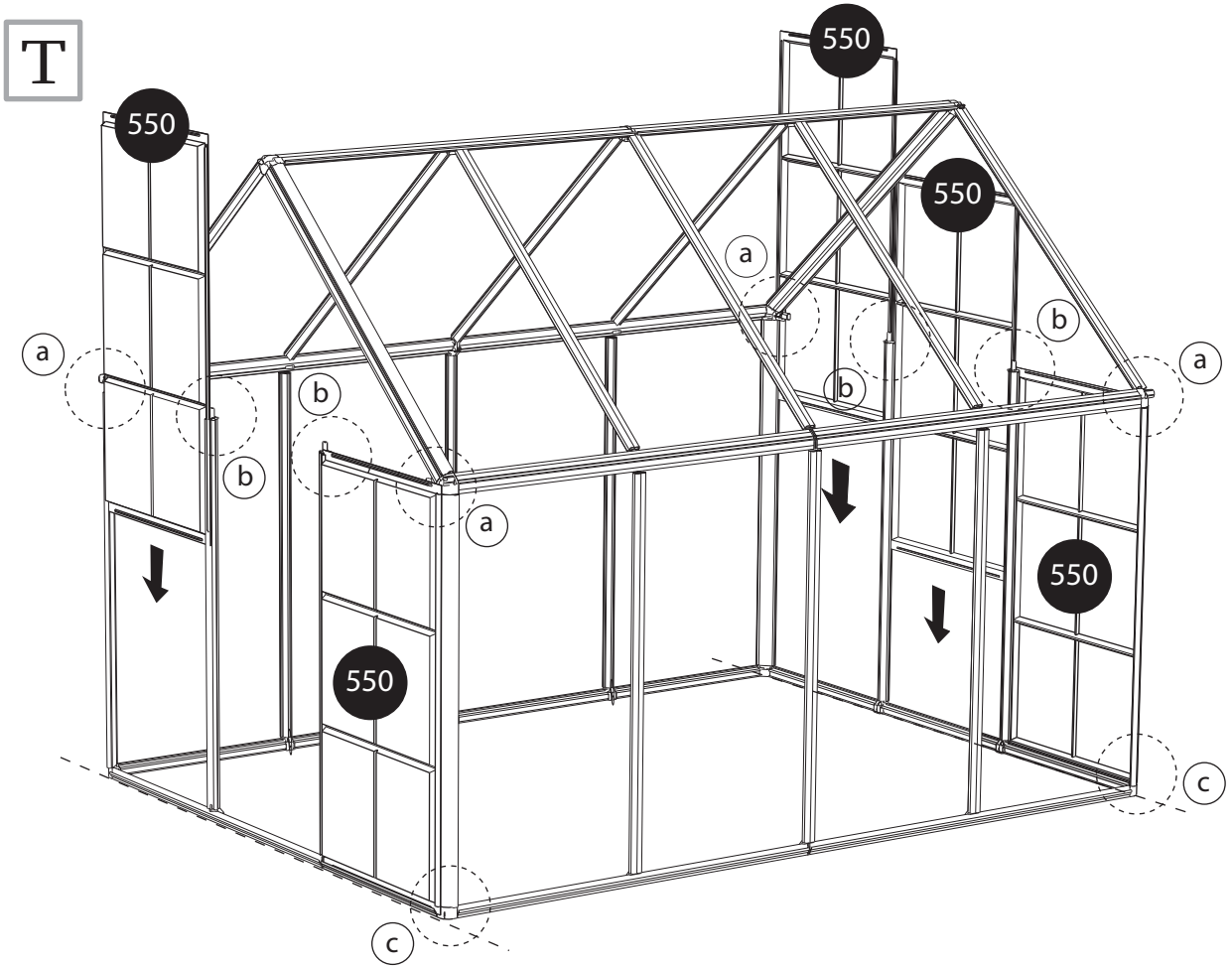


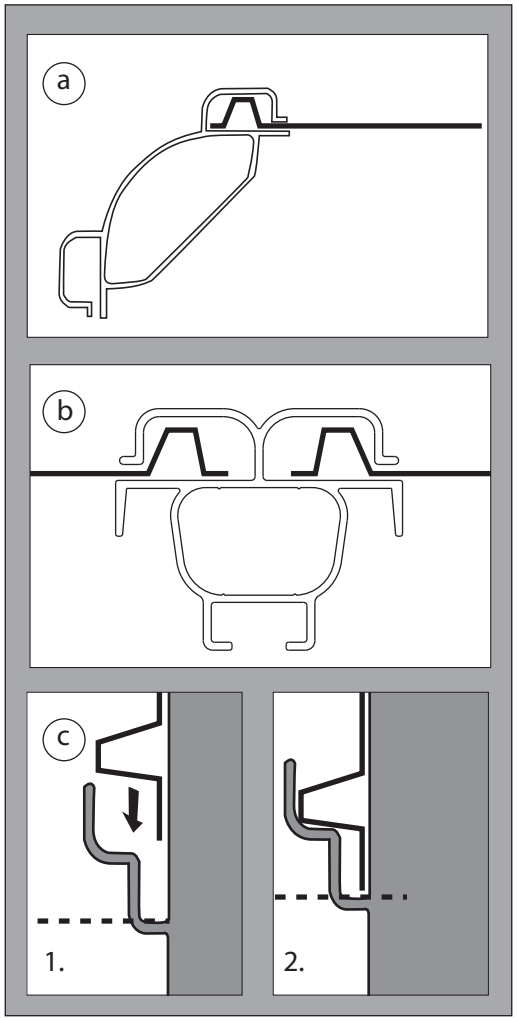


| | |
|---|---|
| **550** | x 5 |

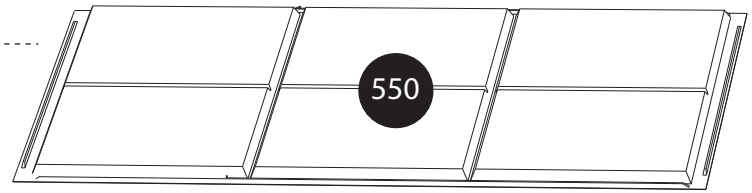

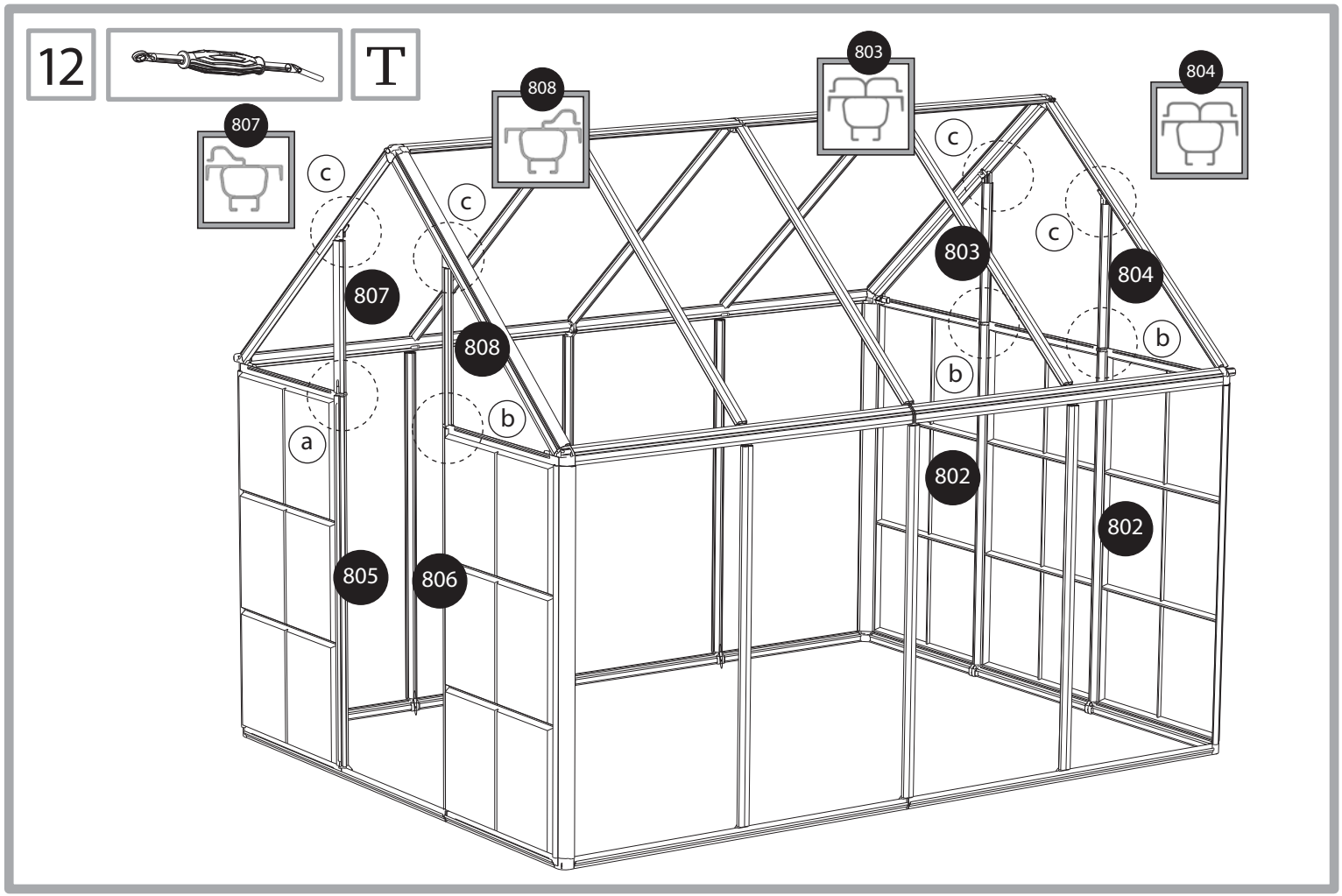


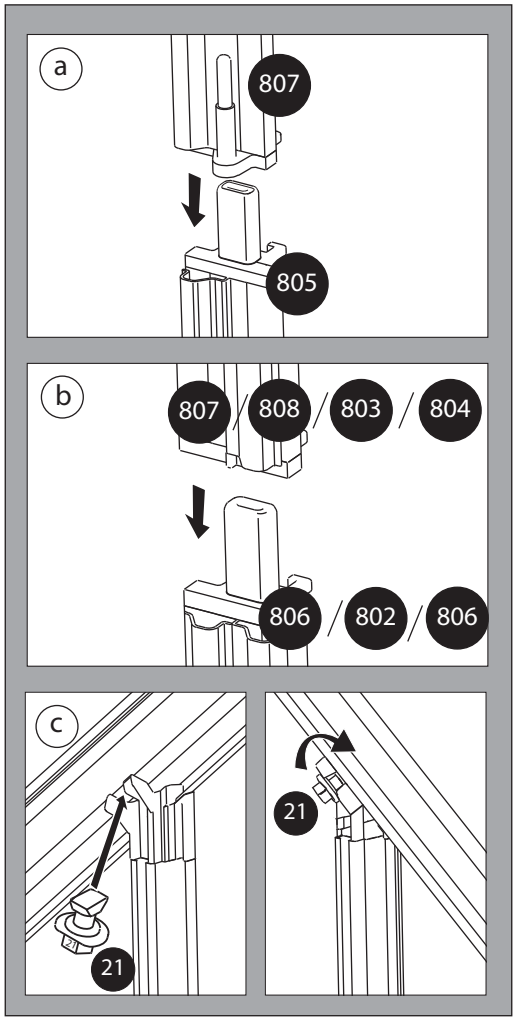


| | | |
|---|---|---|
| **807** | 460mm/18" | x 1 |
| **808** | 460mm/18" | x 1 |
| **804** | 460mm/18" | x 1 |
| **803** | 460mm/18" | x 1 |

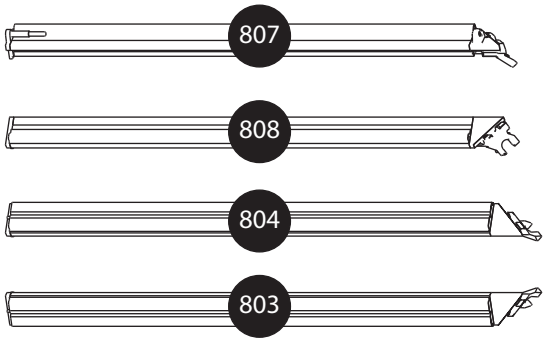


| | |
|---|---|
| **21** | x 4 |

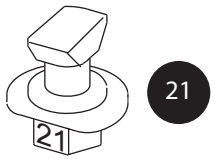

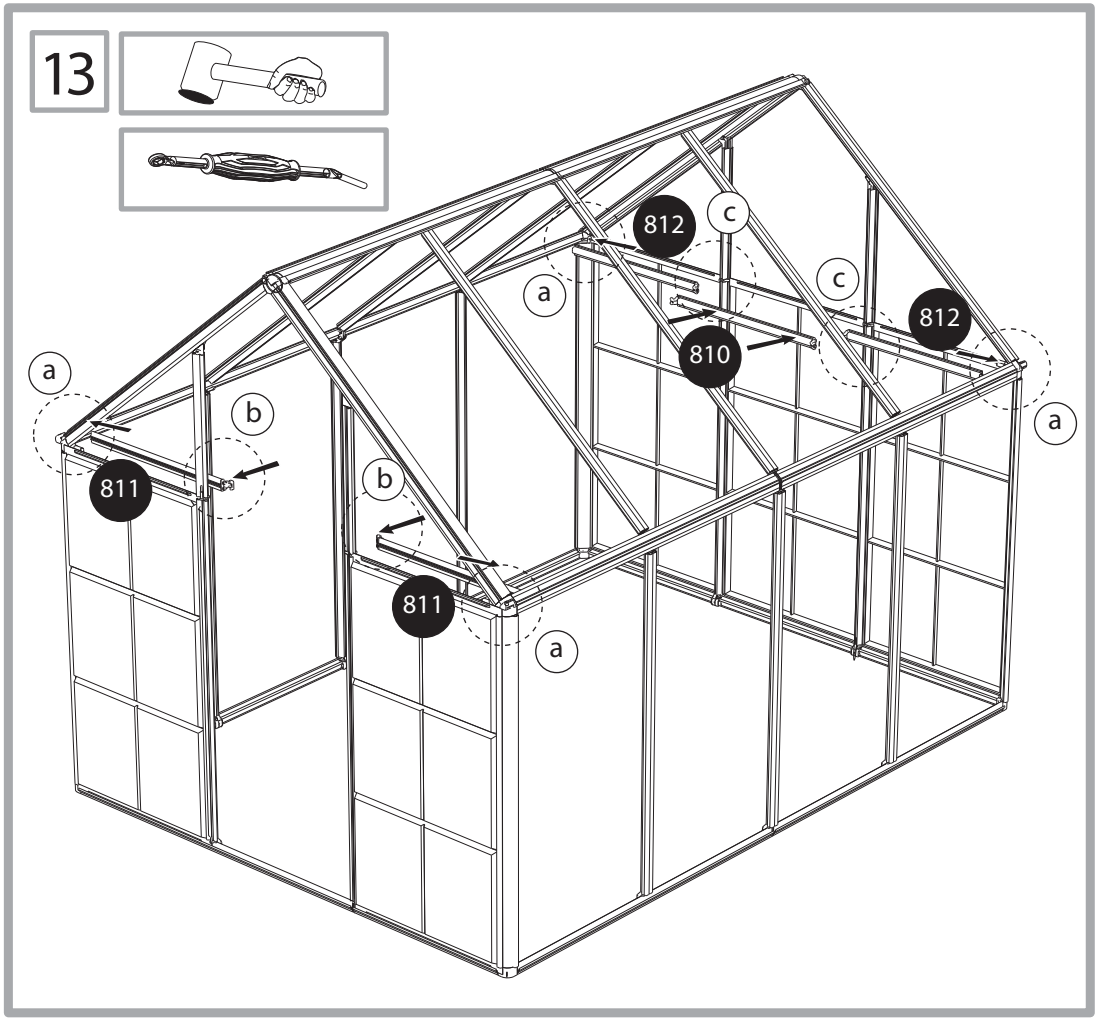


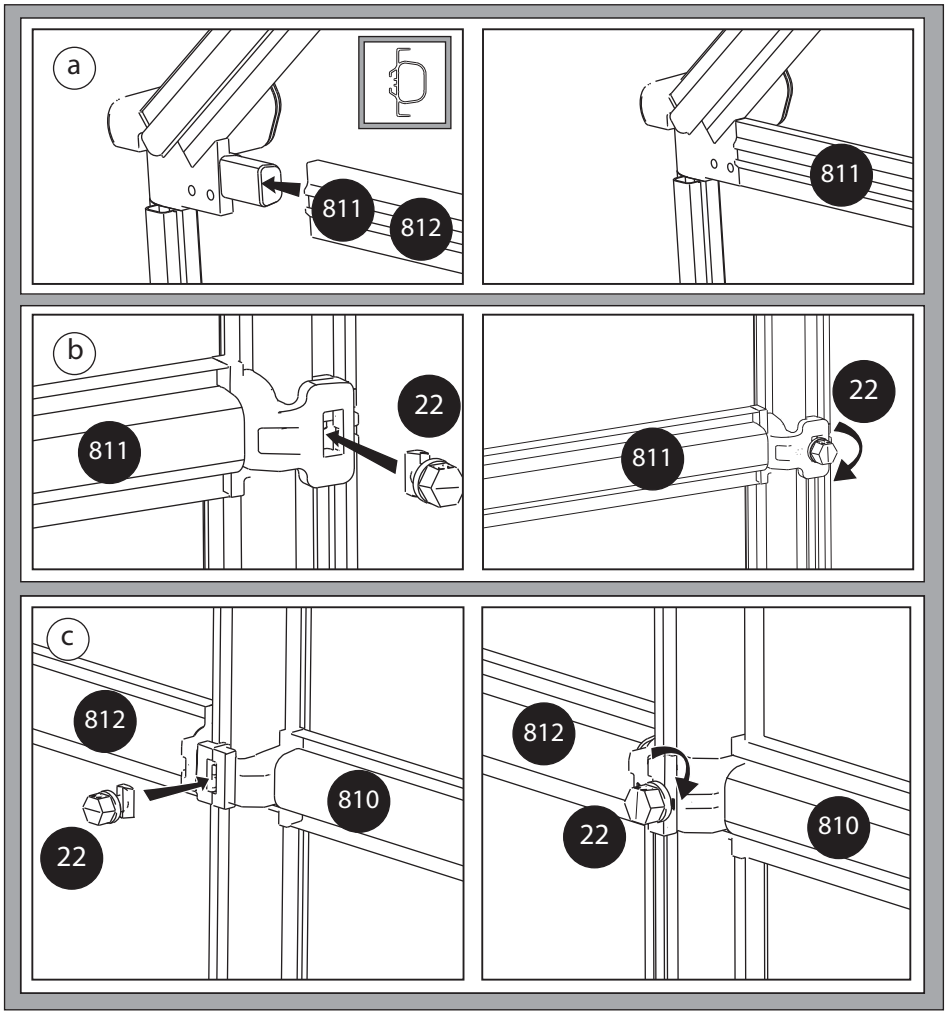


| | | |
|---|---|---|
| **811** | 530mm/20.85” | x 2 |
| **810** | 560mm/22” | x 1 |
| **812** | 530mm/20.85” | x 2 |

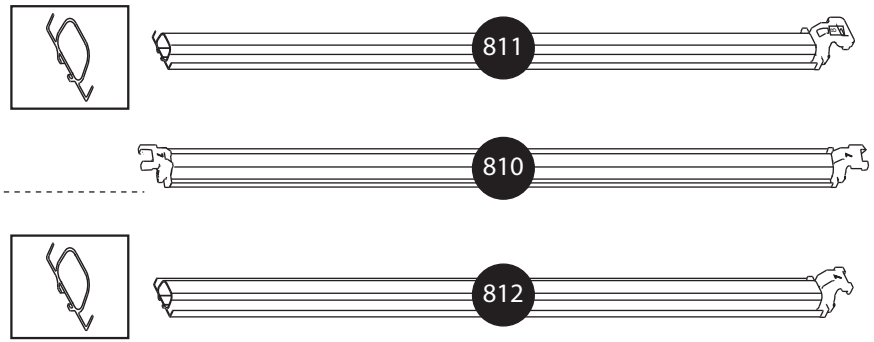


| | |
|---|---|
| **22** | x 4 |

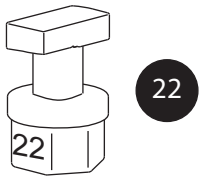

14



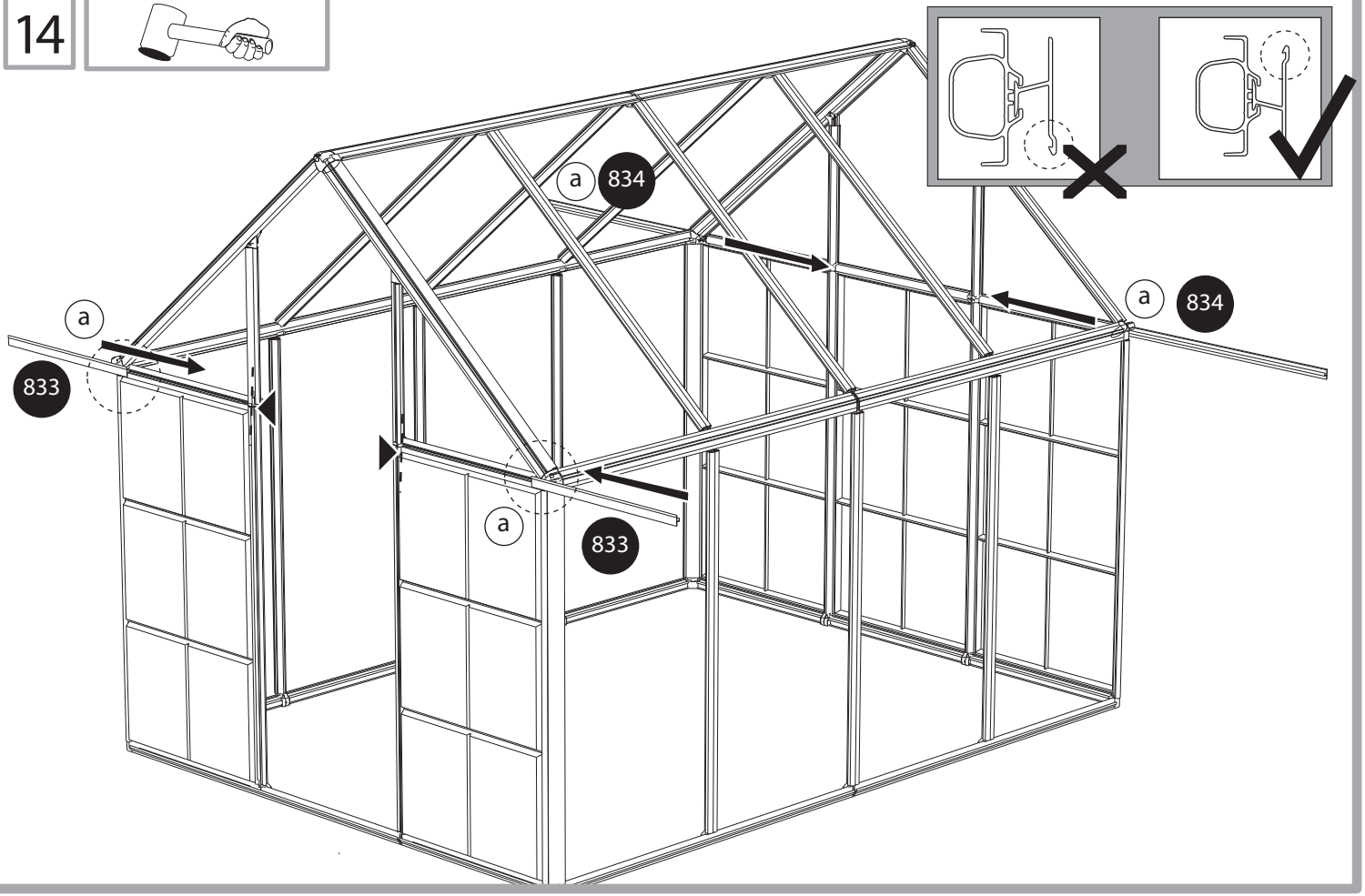


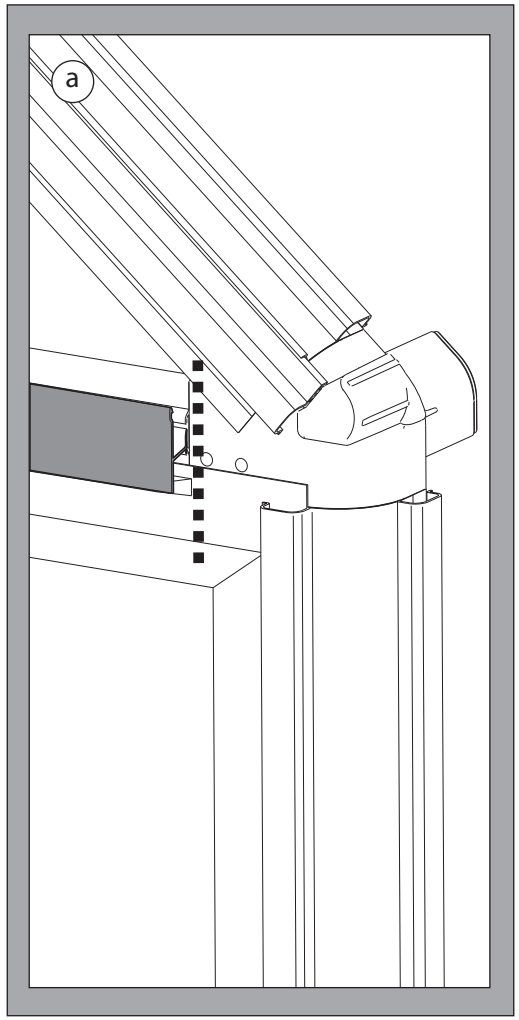


| | | |
|---|---|---|
| **833** | 550mm/22” | x 2 |
| **834** | 854mm/33.6” | x 2 |

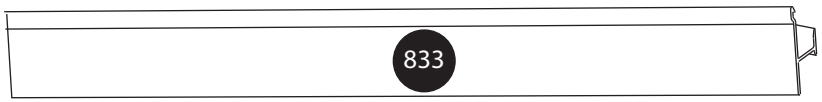


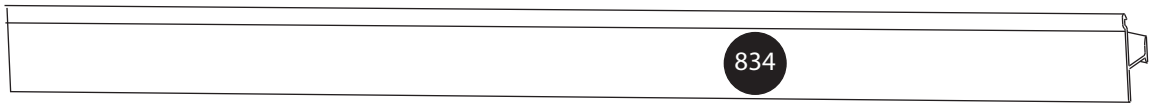


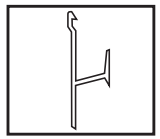

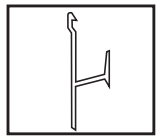

15

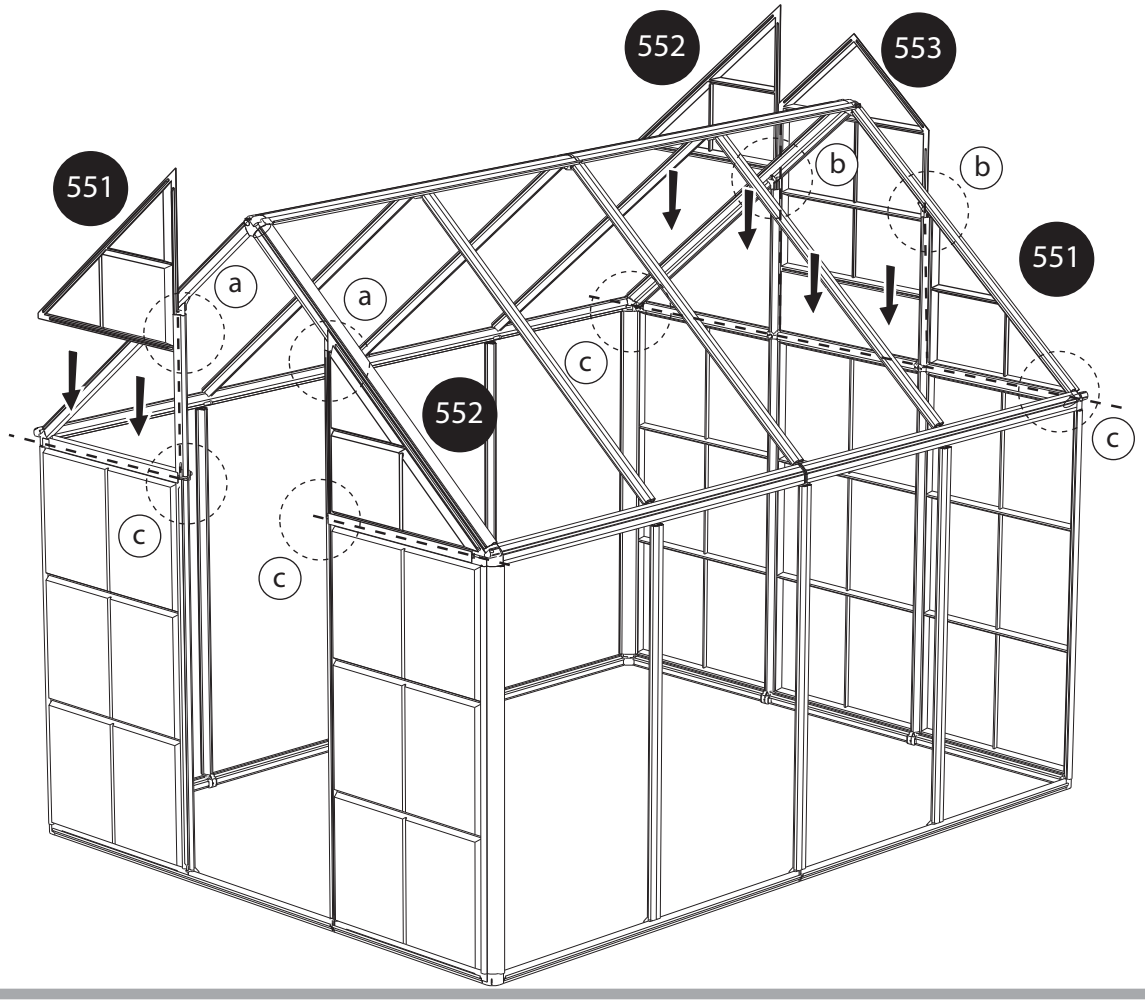


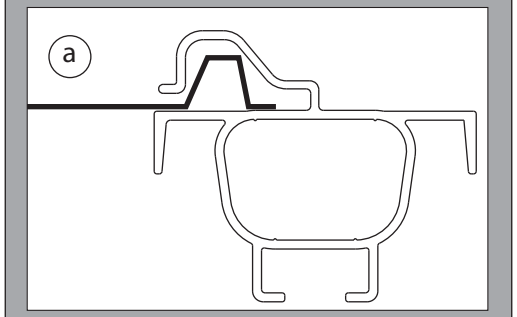


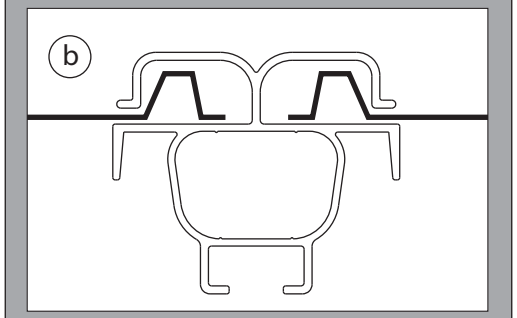


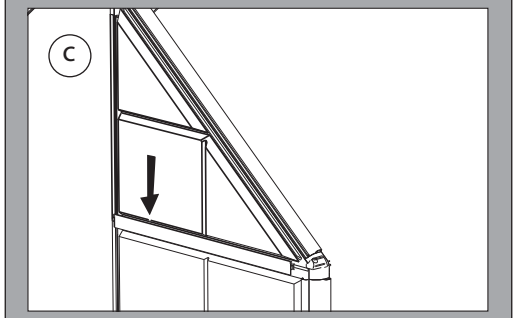


| | |
|---|---|
| **551** | x 2 |

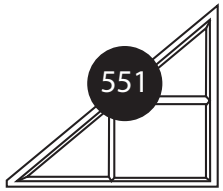


| | |
|---|---|
| **552** | x 2 |

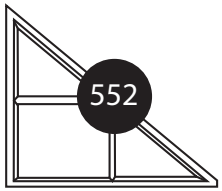


| | |
|---|---|
| **553** | x 1 |

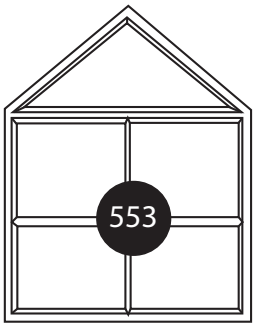

16

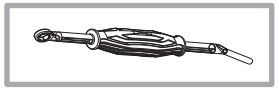

T

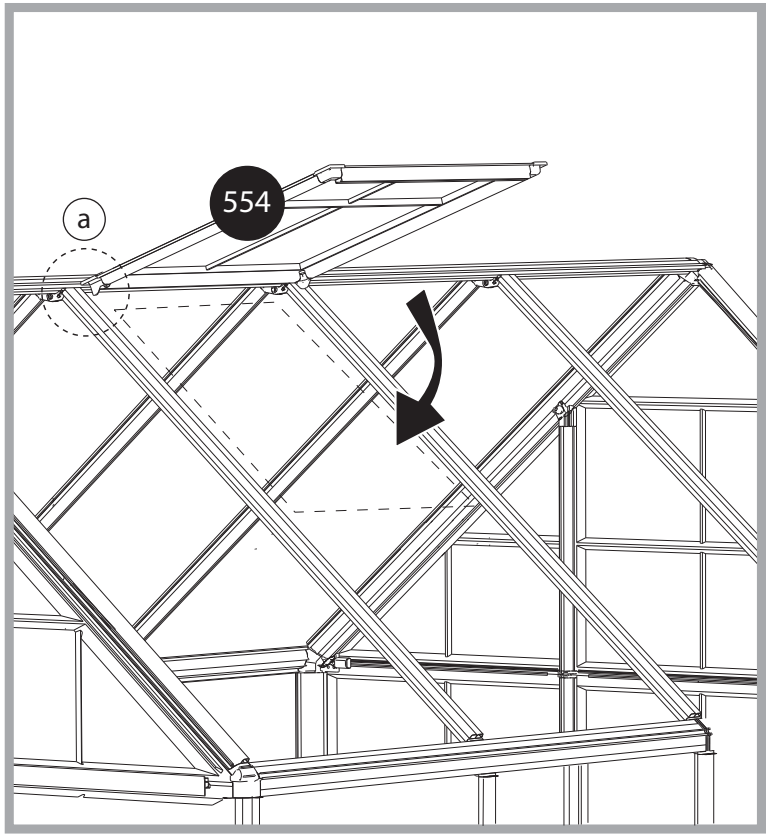


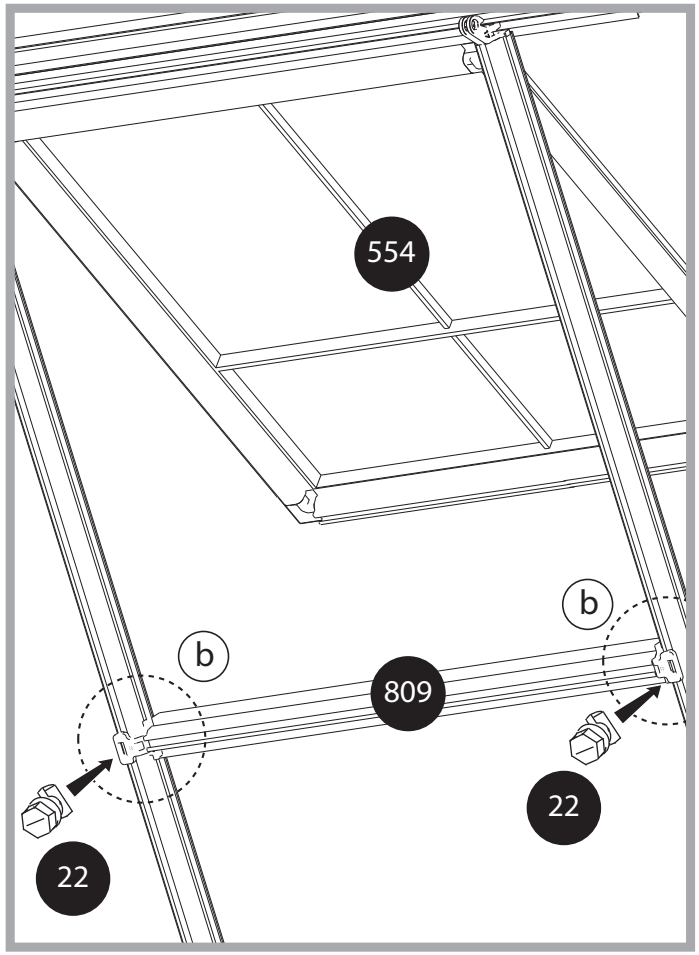


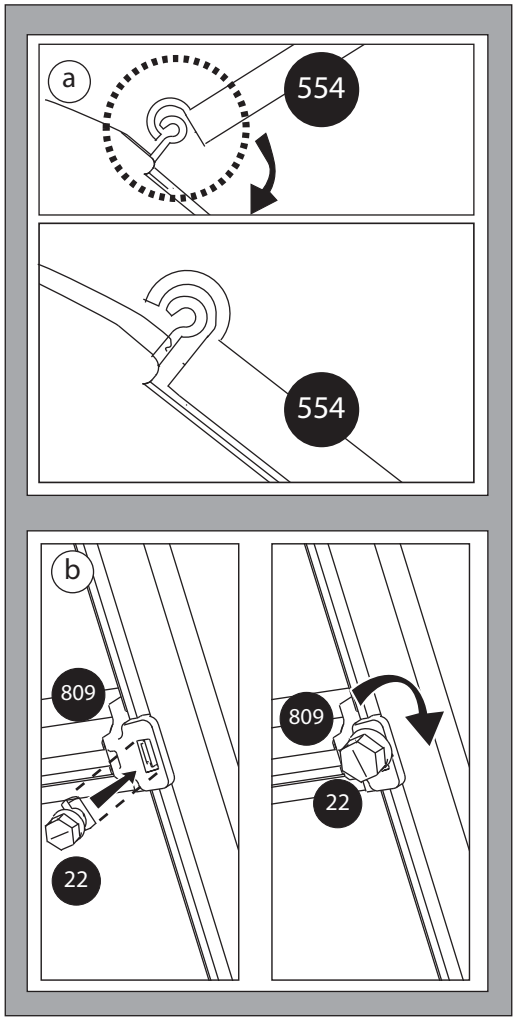


| | | |
|---|---|---|
| **809** | 556mm/21.8″ | × 1 |
| **22** | | × 2 |

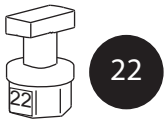


22

| | |
|---|---|
| **554** | × 1 |

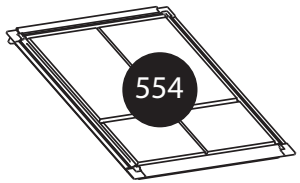

17

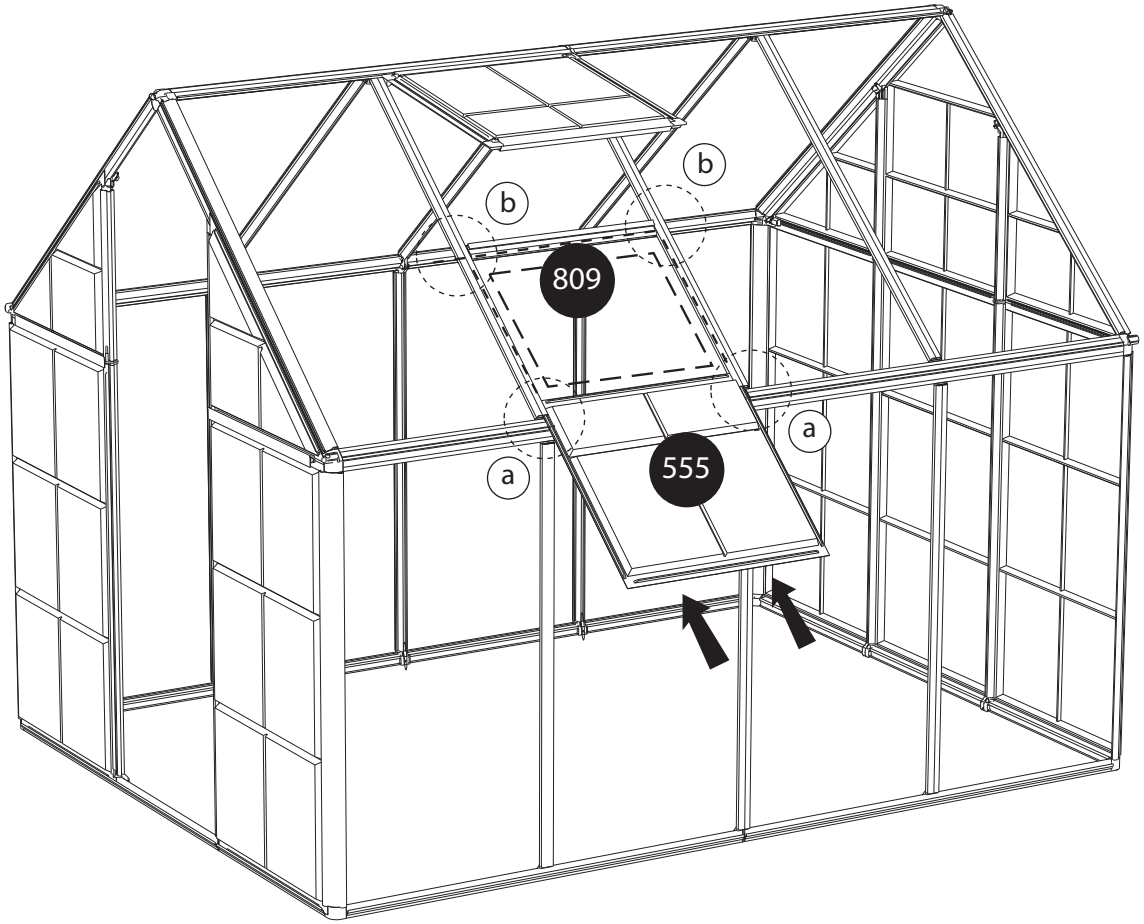


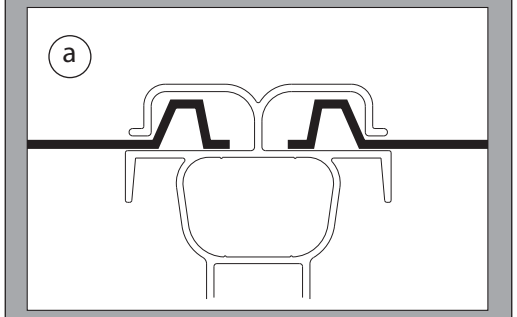


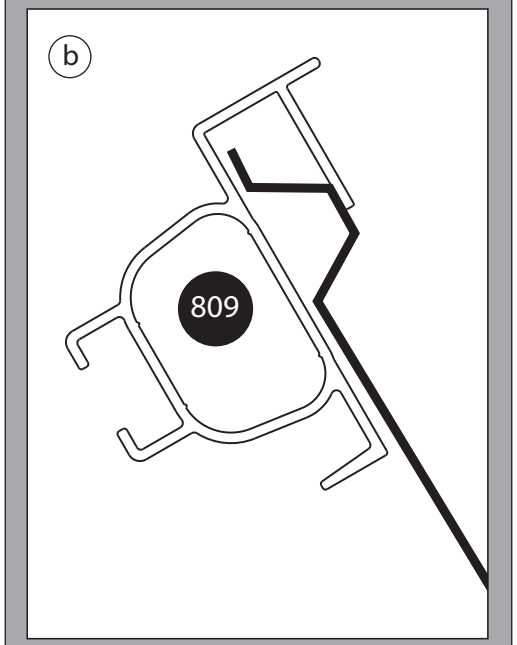


| | |
|---|---|
| **555** | × 1 |

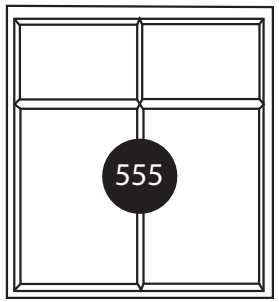

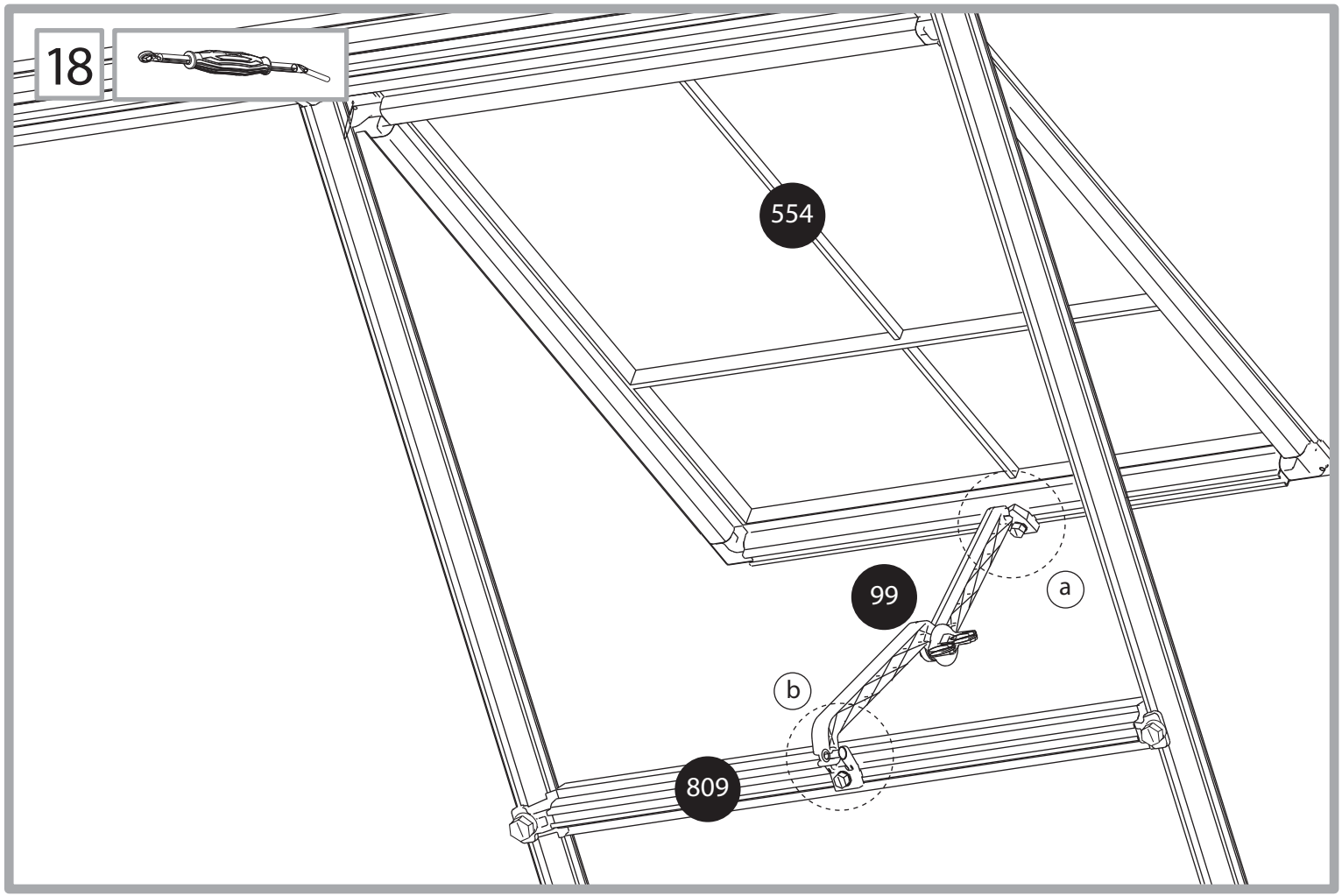


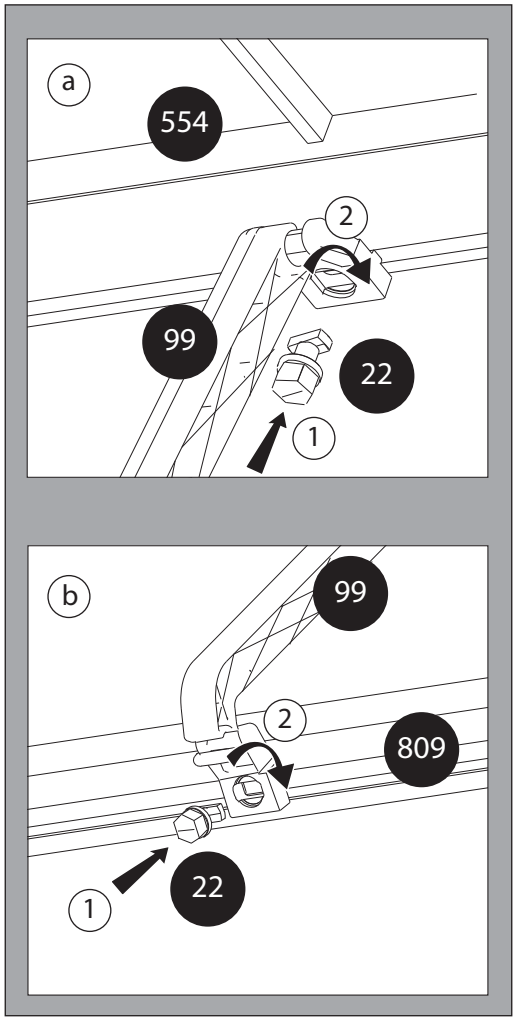


| | |
|---|---|
| **99** | x1 |
| **22** | x 2 |

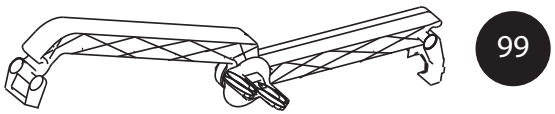


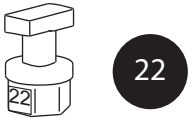

19 T

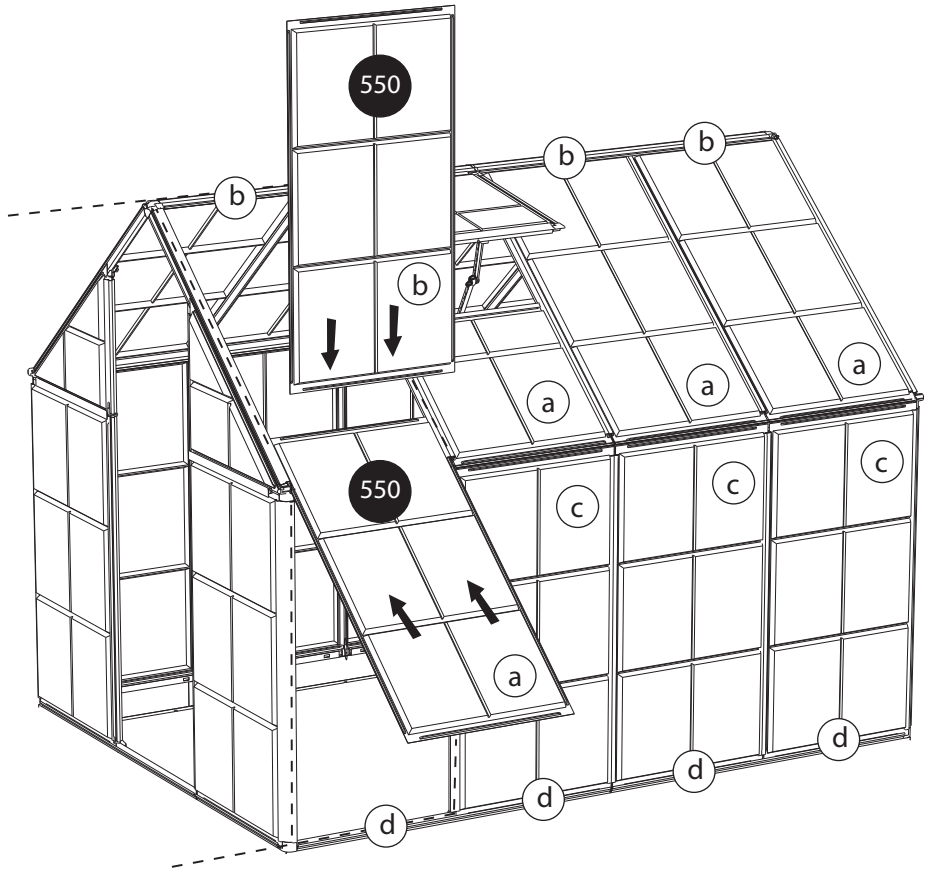


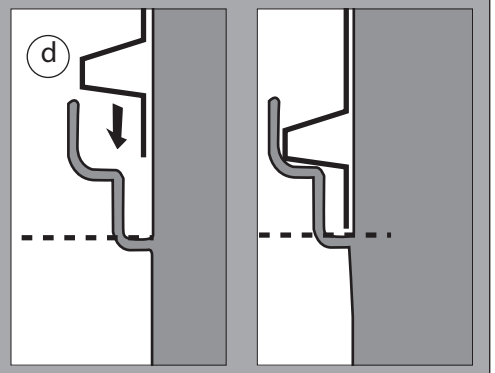


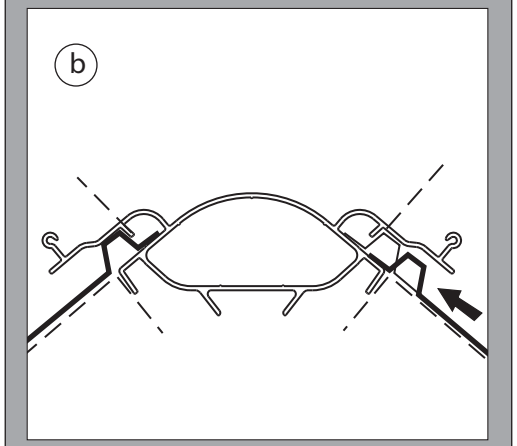


| | |
|---|---|
| **550** | x 15 |

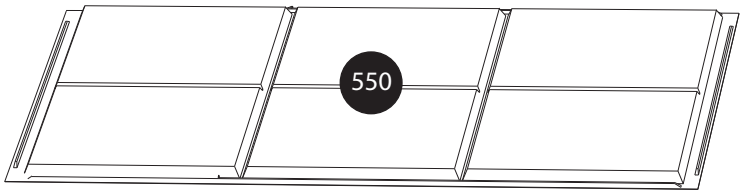

20

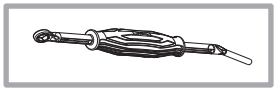

T

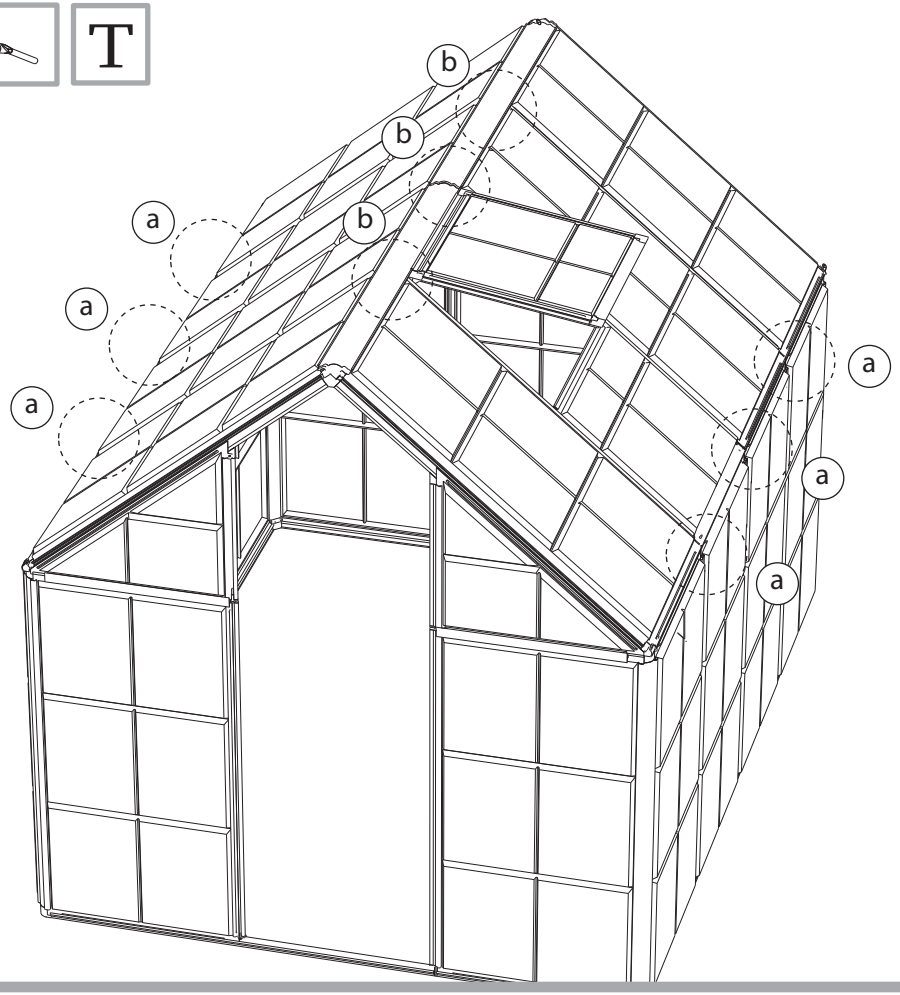


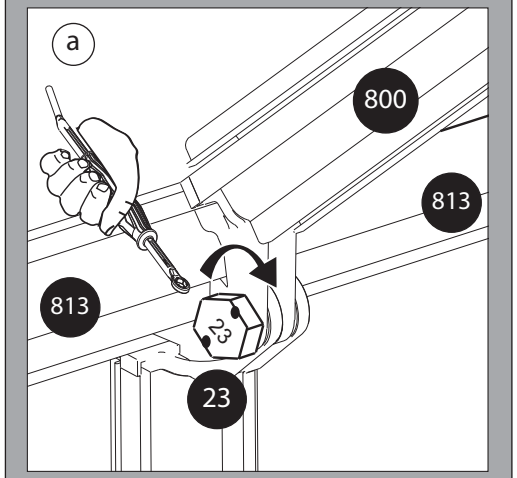


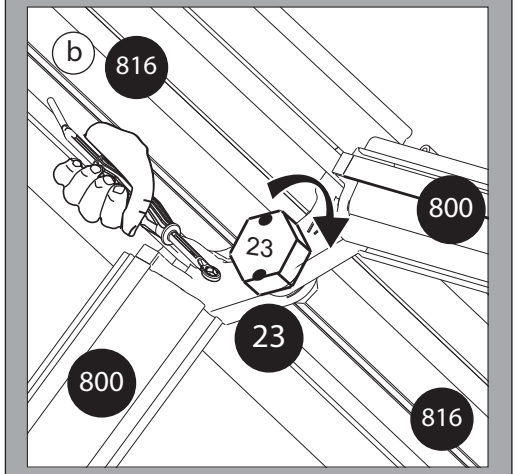


| | |
|---|---|
| **23** | x 9 |

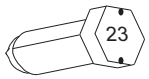


23

21

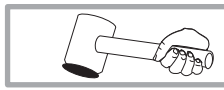

T

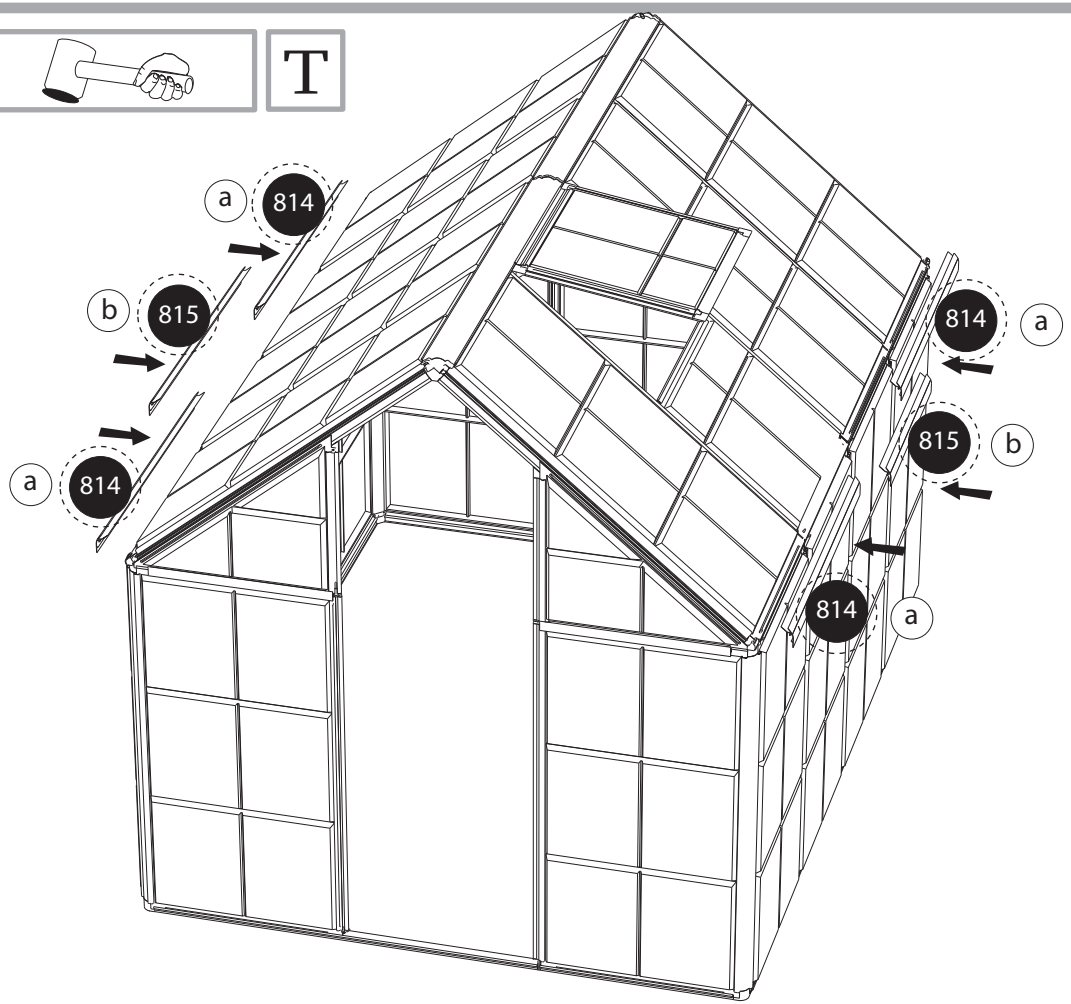


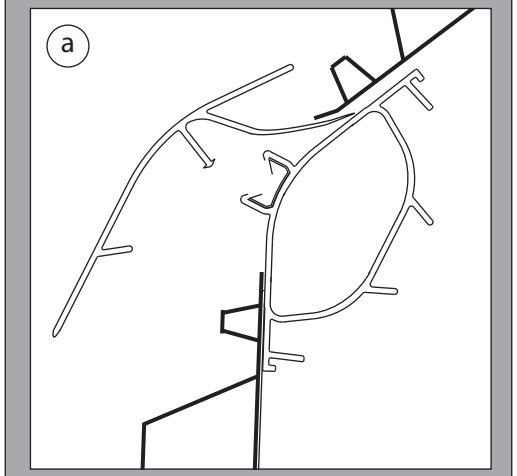


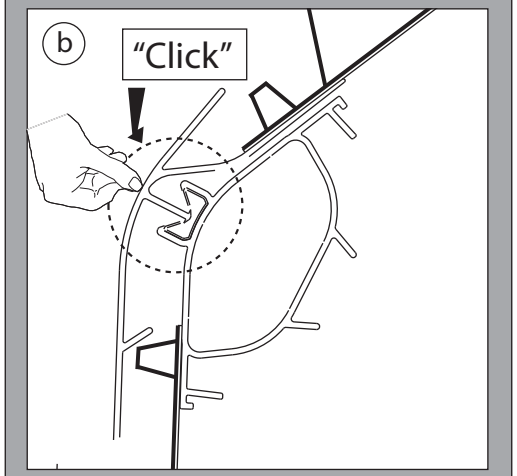


| | | |
|---|---|---|
| **815** | 599mm/23.6" | x 2 |
| **814** | 897mm/35.4" | x 4 |

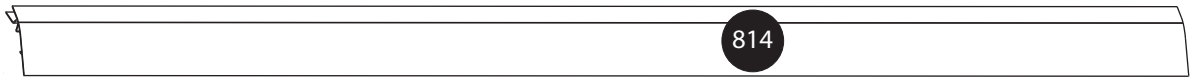


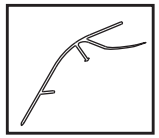

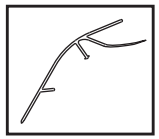

22

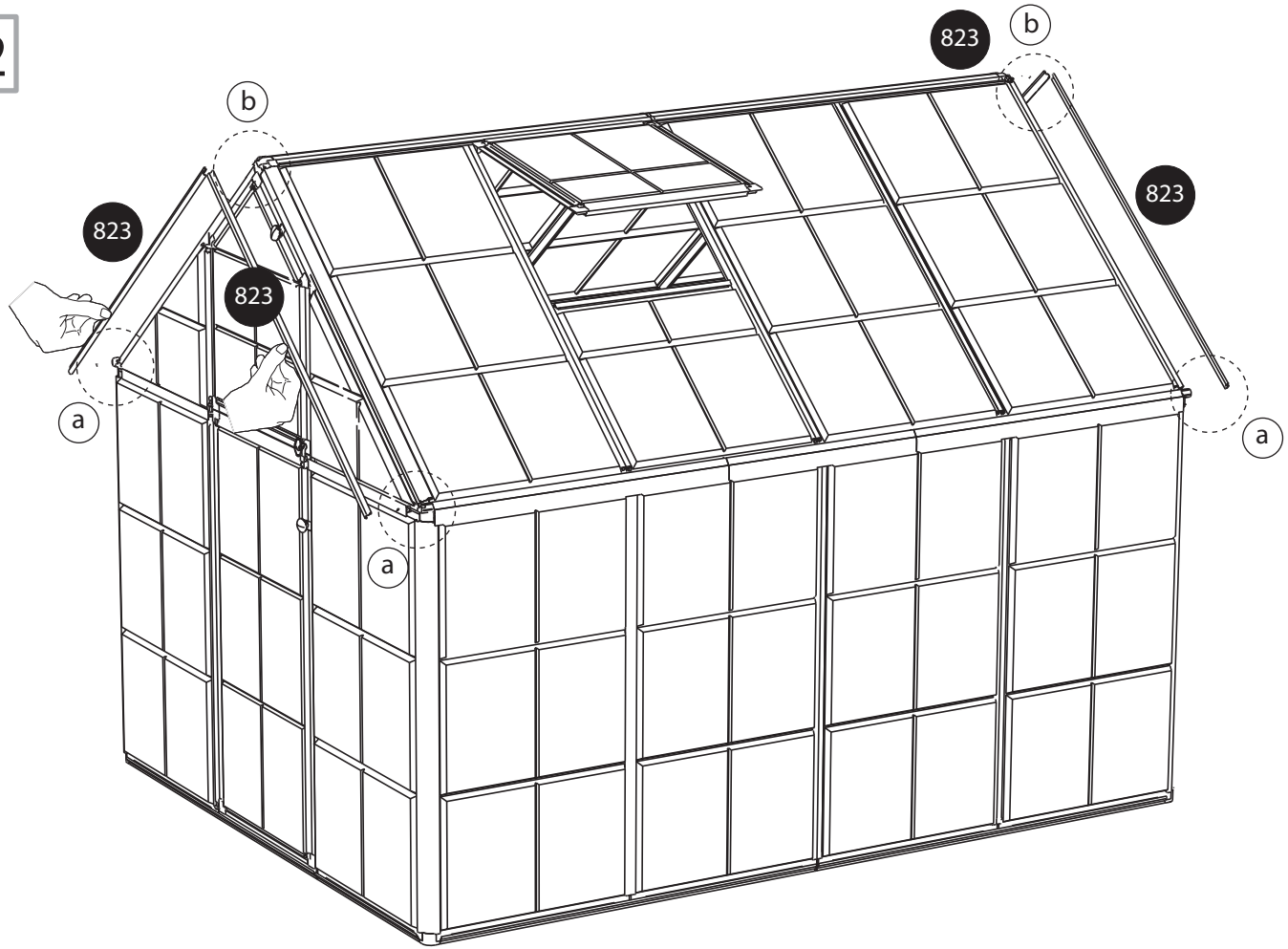


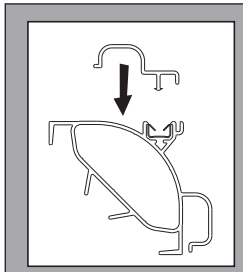

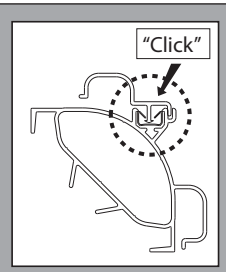


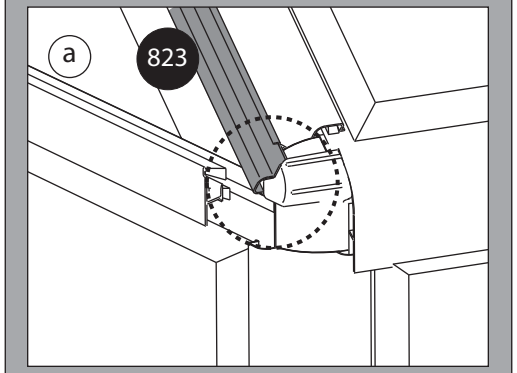


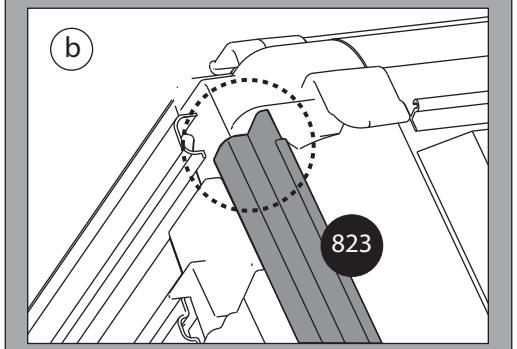


| | | |
|---|---|---|
| **823** | 1153mm/454.4" | x 4 |

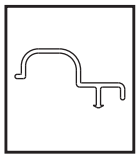

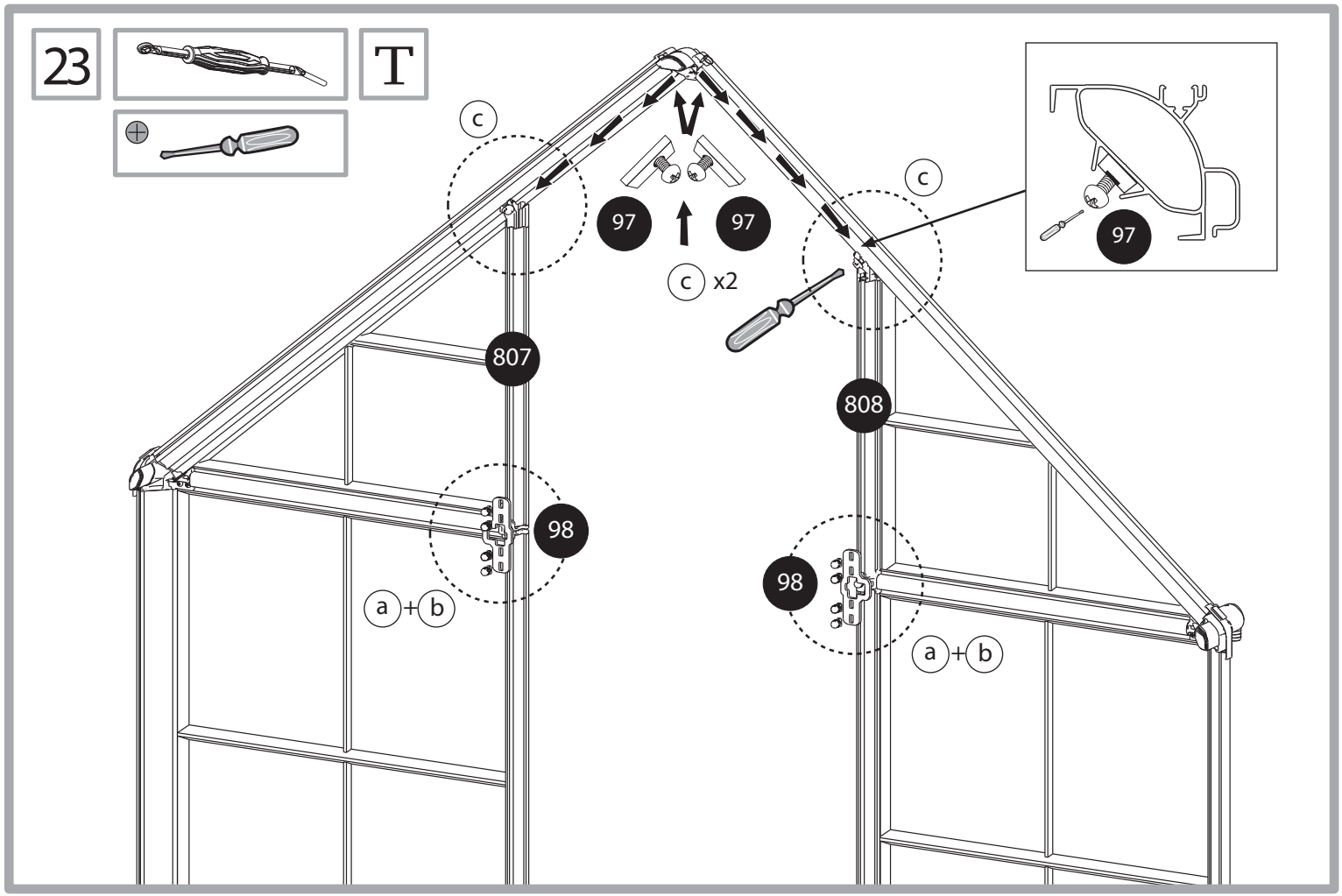


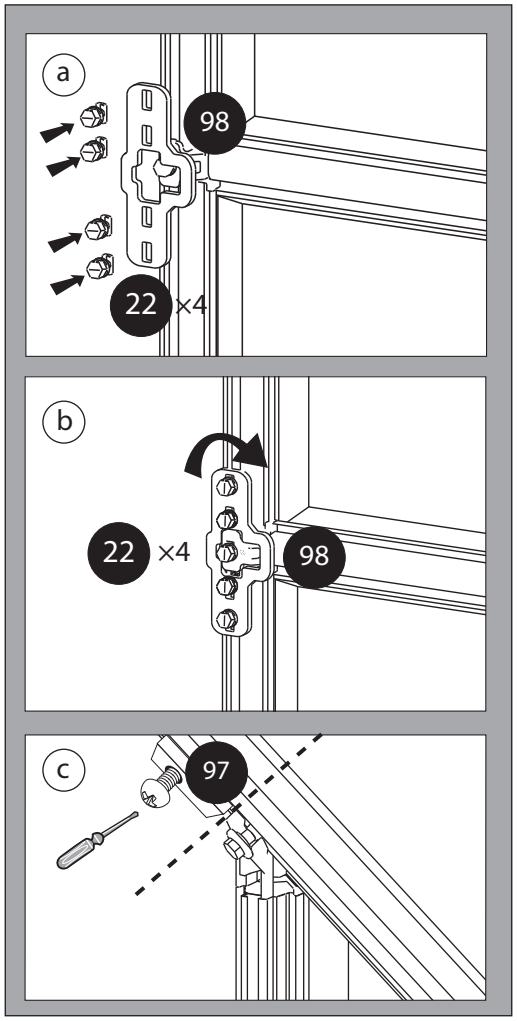


| | | |
|---|---|---|
| **22** | | × 8 |

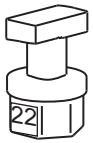


22

| | | |
|---|---|---|
| **98** | | x 2 |

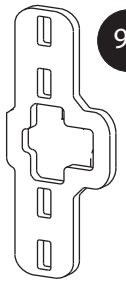

98

| | | |
|---|---|---|
| **97** | 6mm | x 2 |

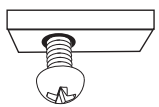

97

24

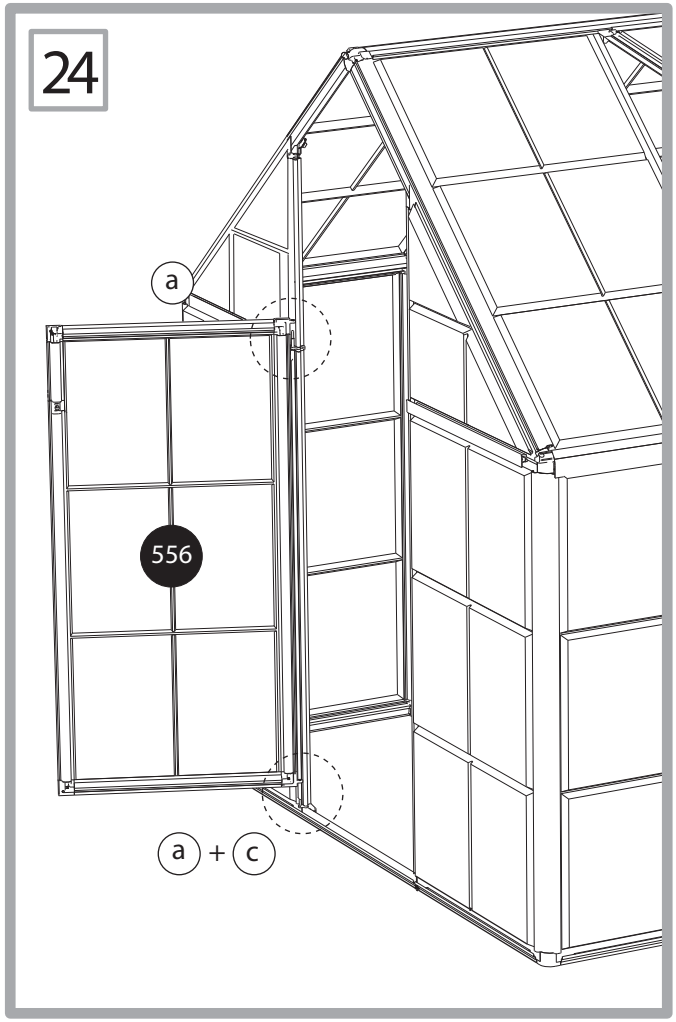


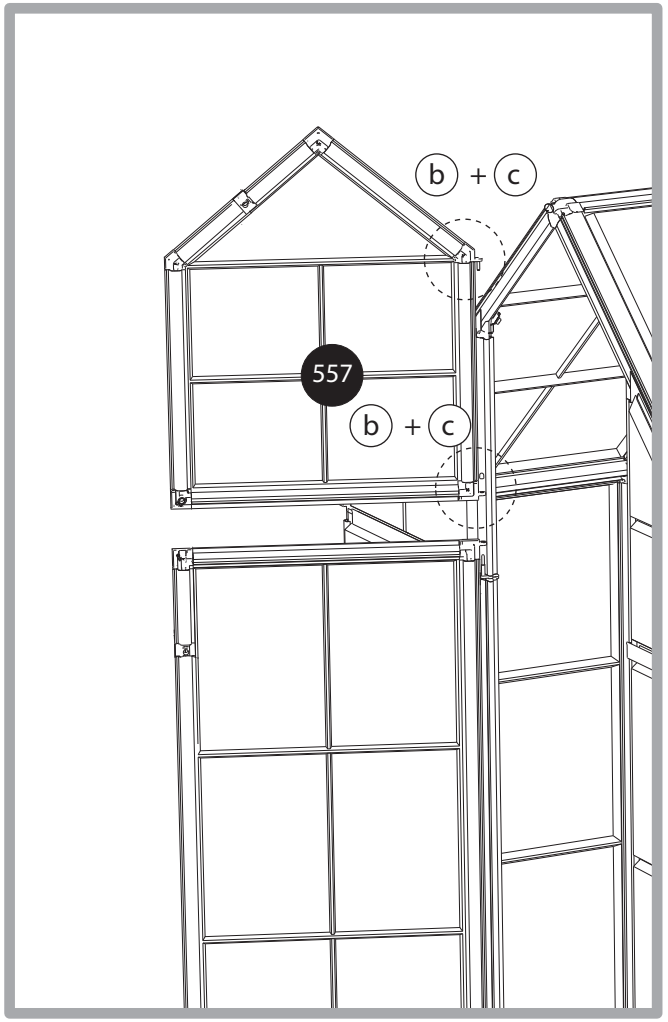


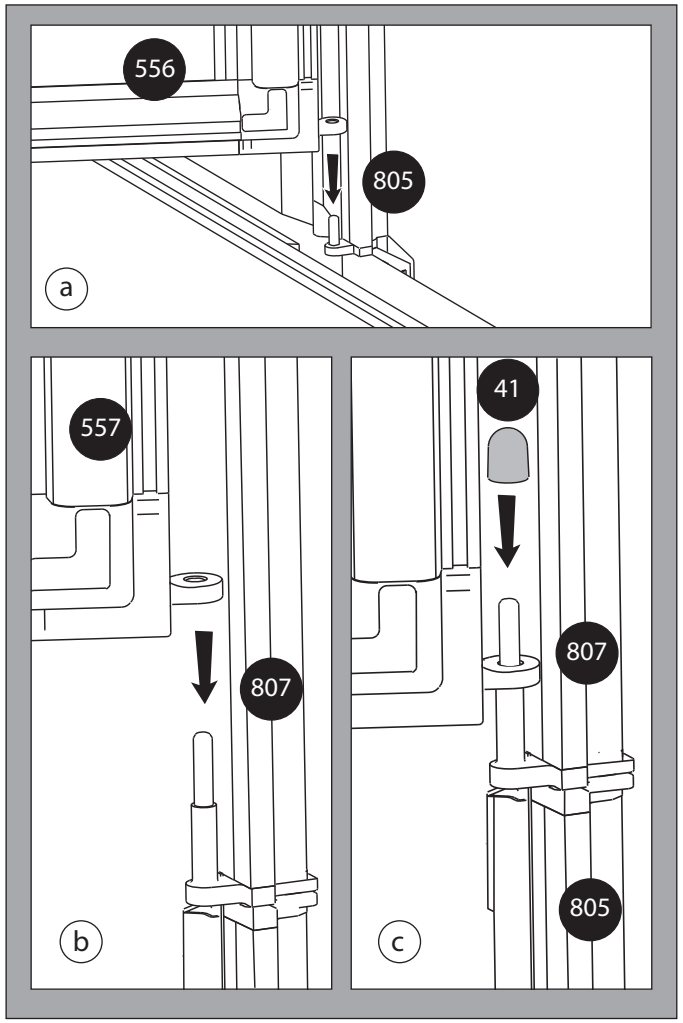


| | |
|---|---|
| **556** | x 1 |

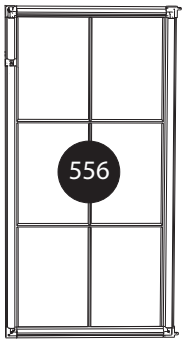


| | |
|---|---|
| **557** | x 1 |

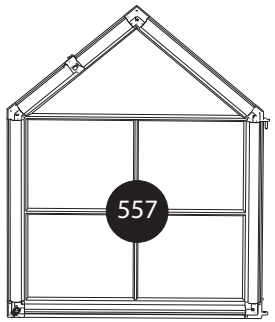


| | |
|---|---|
| **41** | x 3 |

25

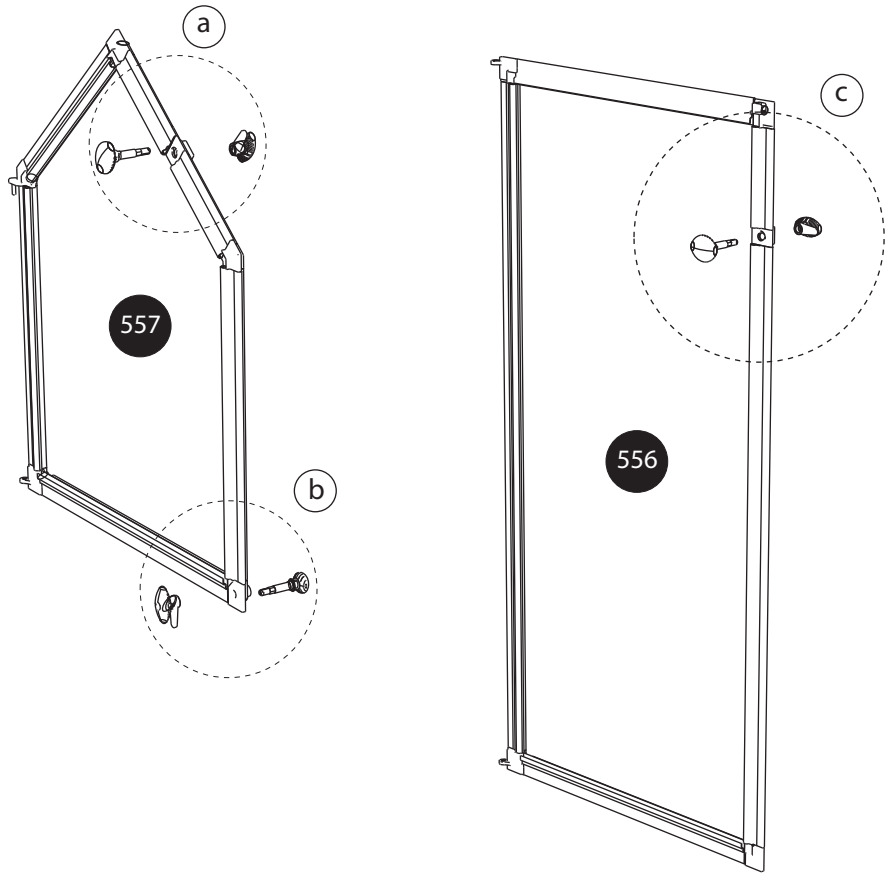


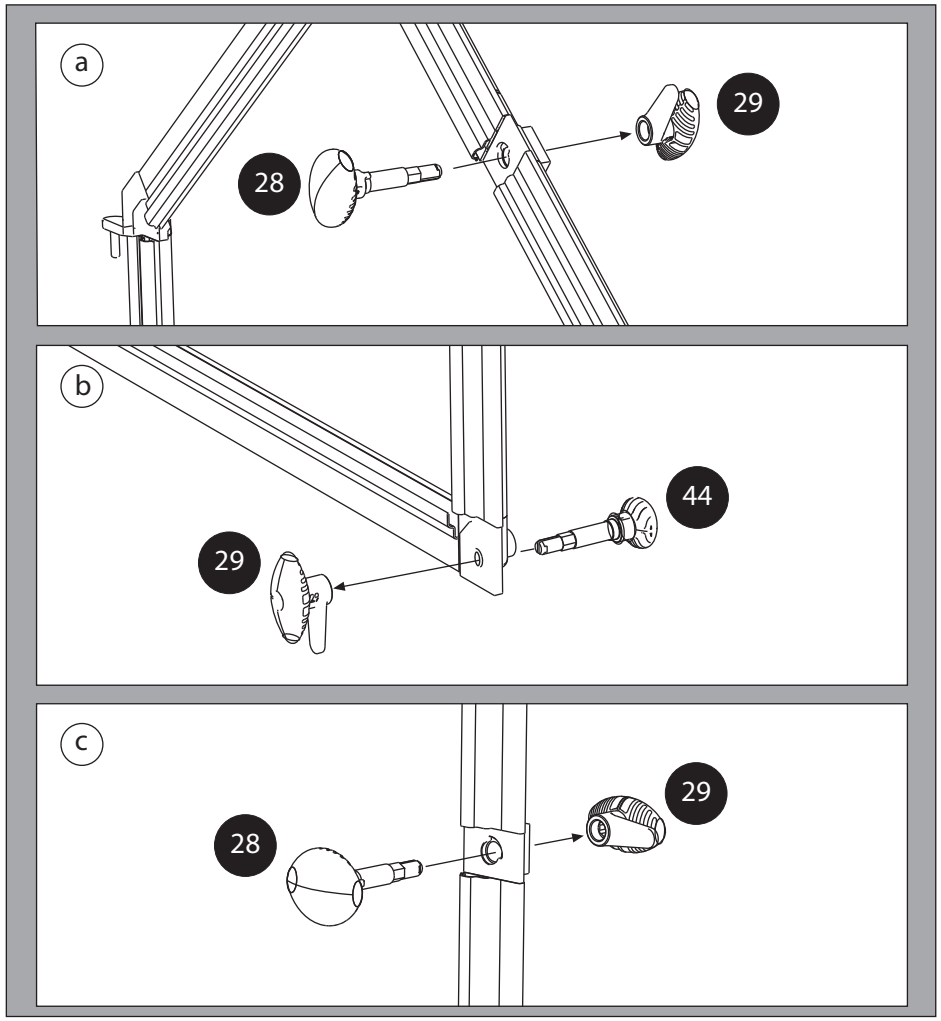


| | |
|---|---|
| **29** | x 3 |

| | |
|---|---|
| **44** | x 1 |

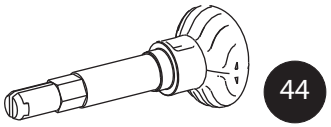


| | |
|---|---|
| **28** | x 2 |

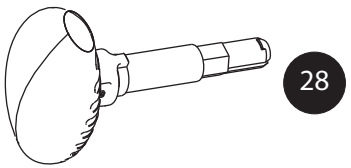

26

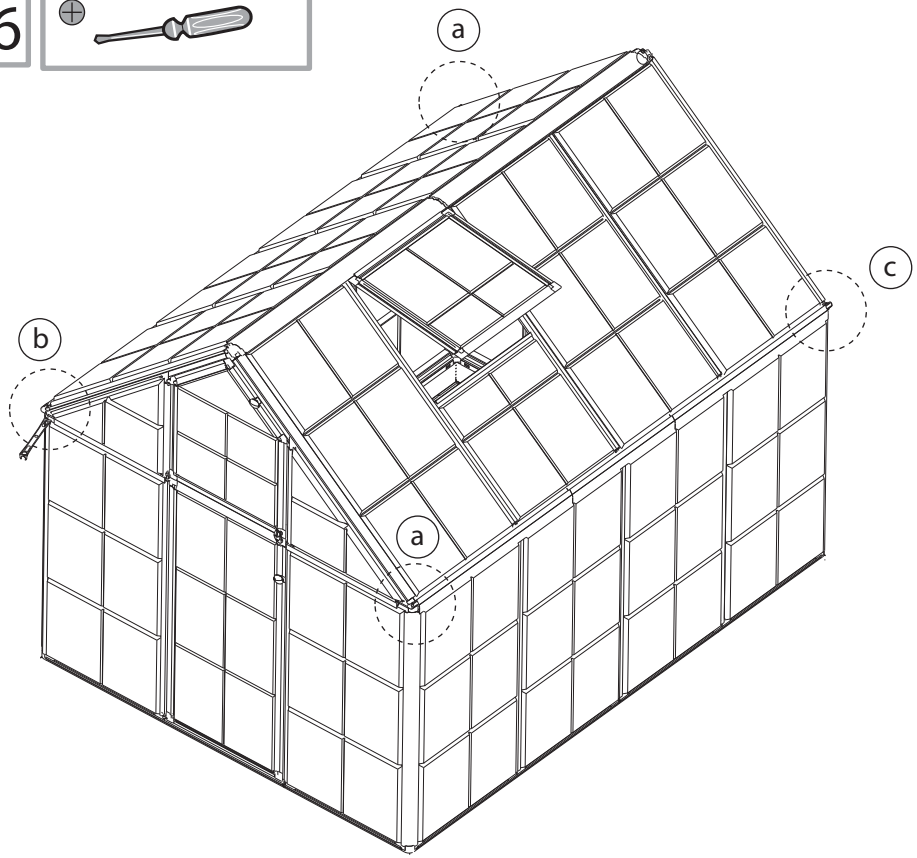


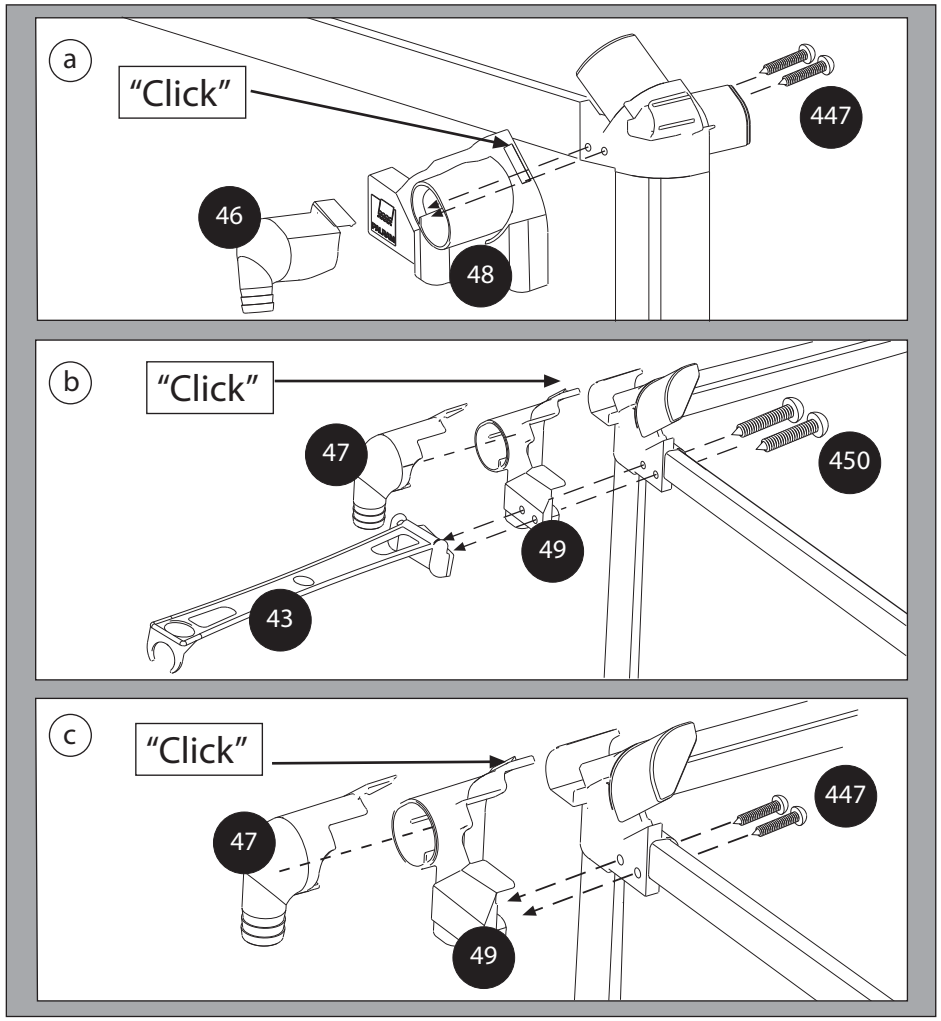


| | | |
|---|---|---|
| **49** | x 1 | 49 |
| **49** | x 1 | 49 |
| **48** | x 2 | 48 |
| **47** | x 2 | 47 |
| **46** | x 2 | 46 |
| **447** 40mm | x 6 | 447 |
| **450** 50mm | x 2 | 450 |
| **43** | x 1 | 43 |

1B

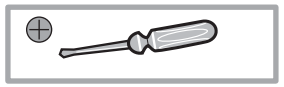

T

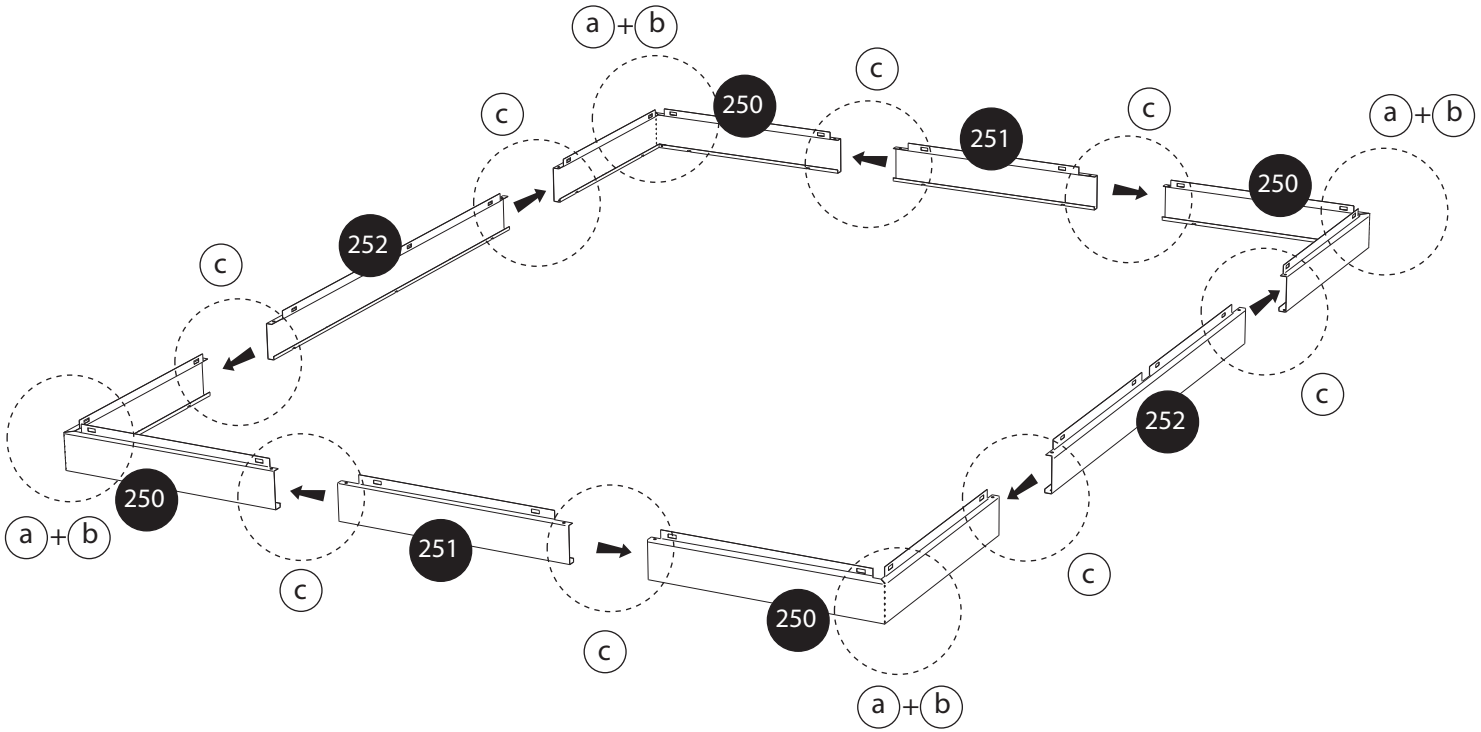


| | | |
|---|---|---|
| **250** 1260mm/49.6” | × 4 | 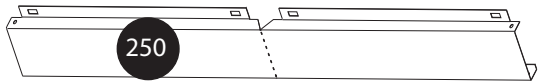 |
| **251** 654mm/25.8” | × 2 | |
| **252** 1260mm/49.6” | × 2 | 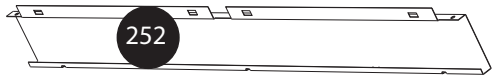 |

| | | |
|---|---|---|
| **447** 20mm | × 4 | 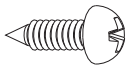 |

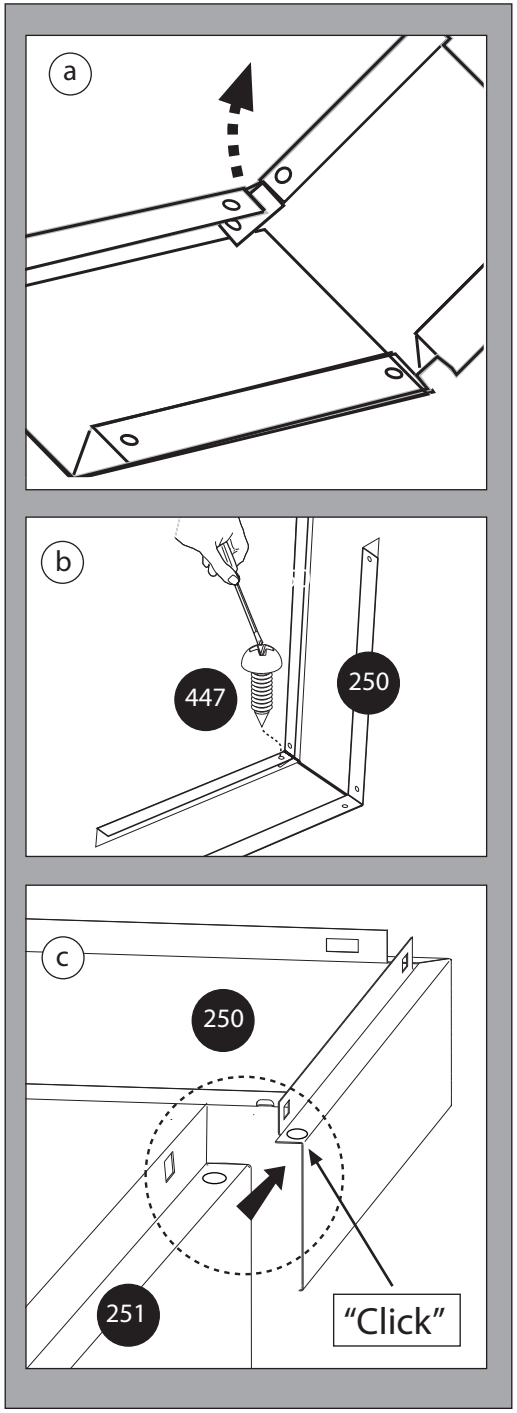

2B



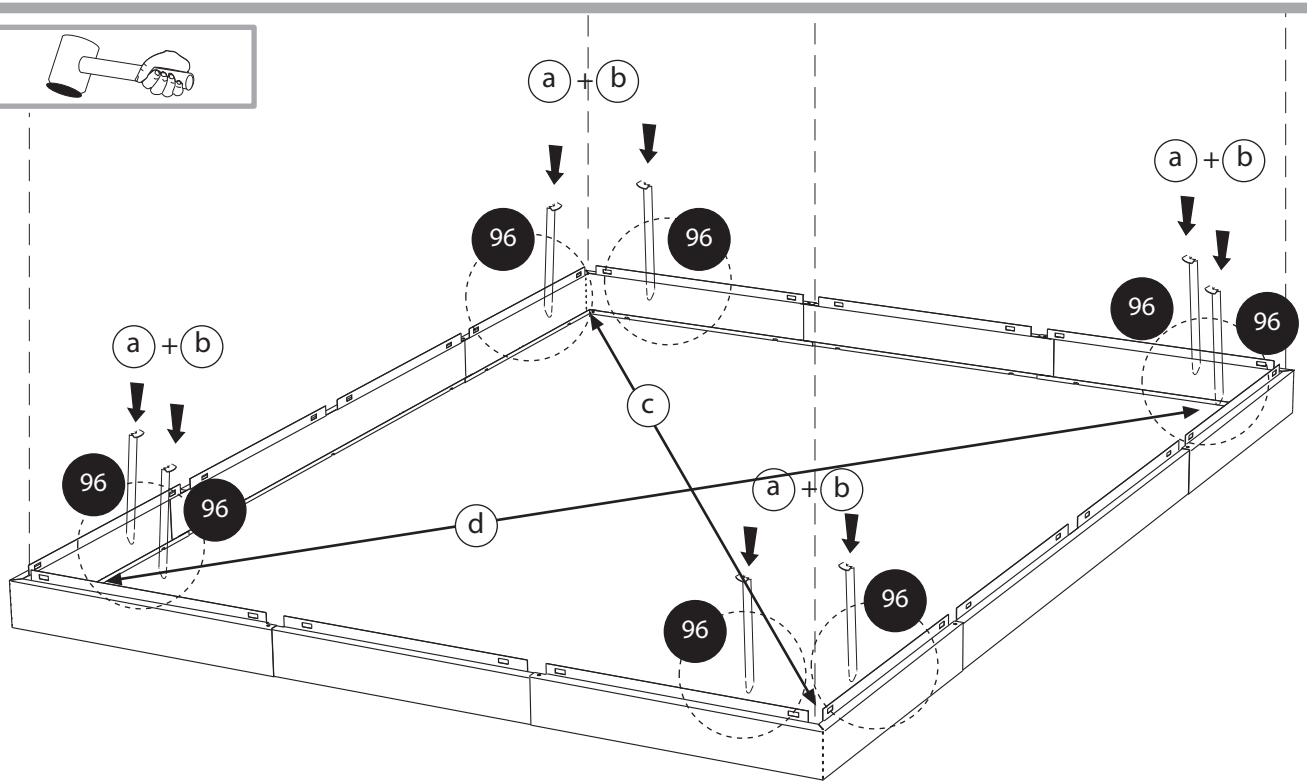


c=d

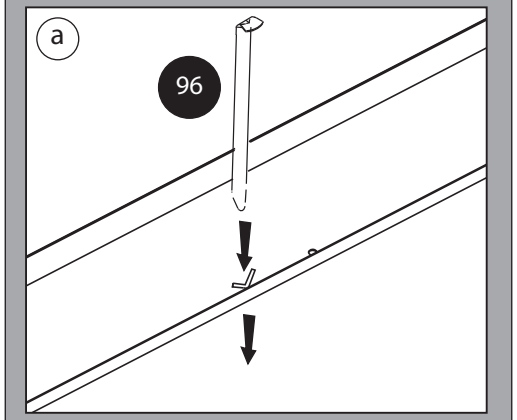


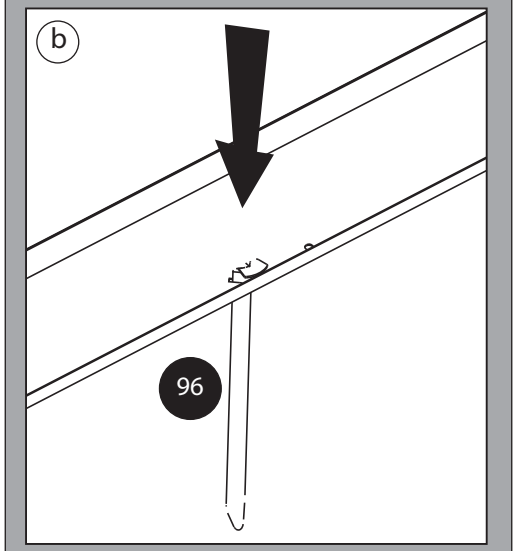


| | |
|---|---|
| **96** | x 8 |

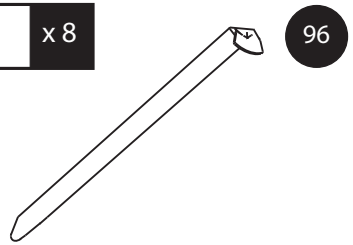

3B

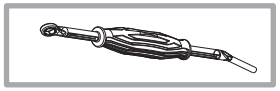

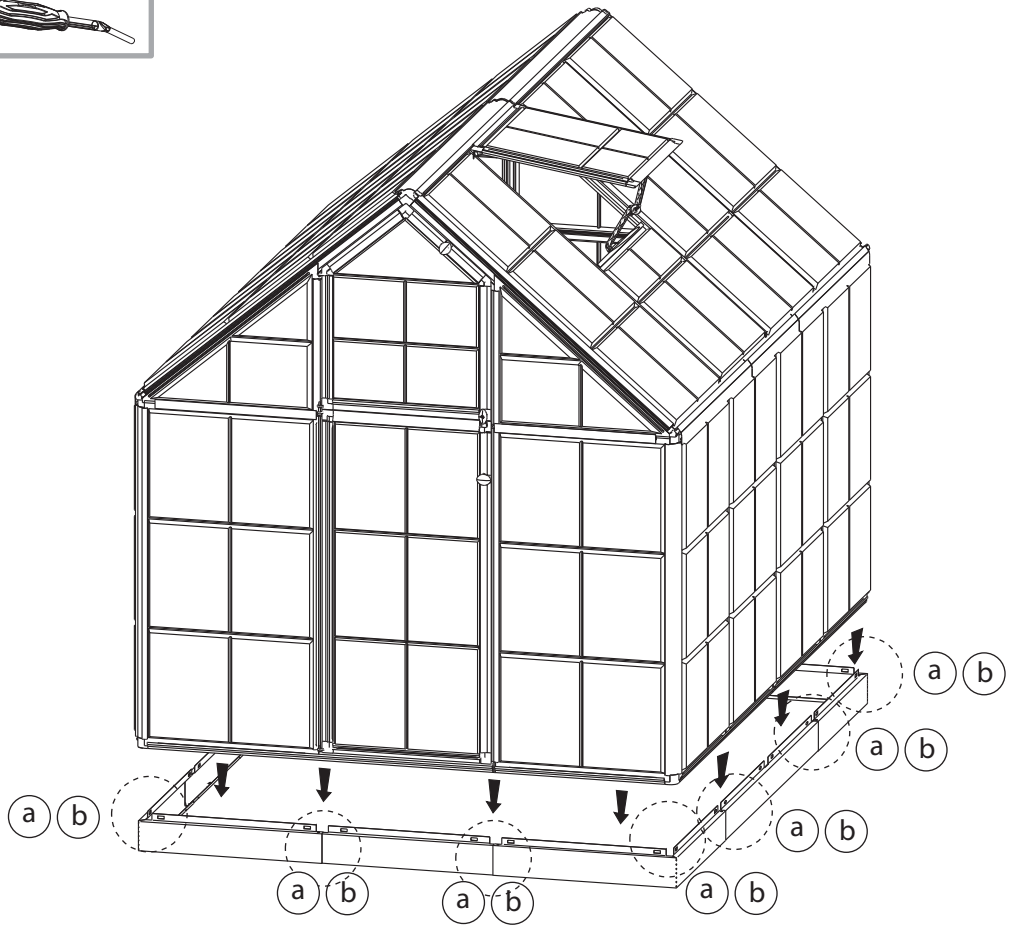


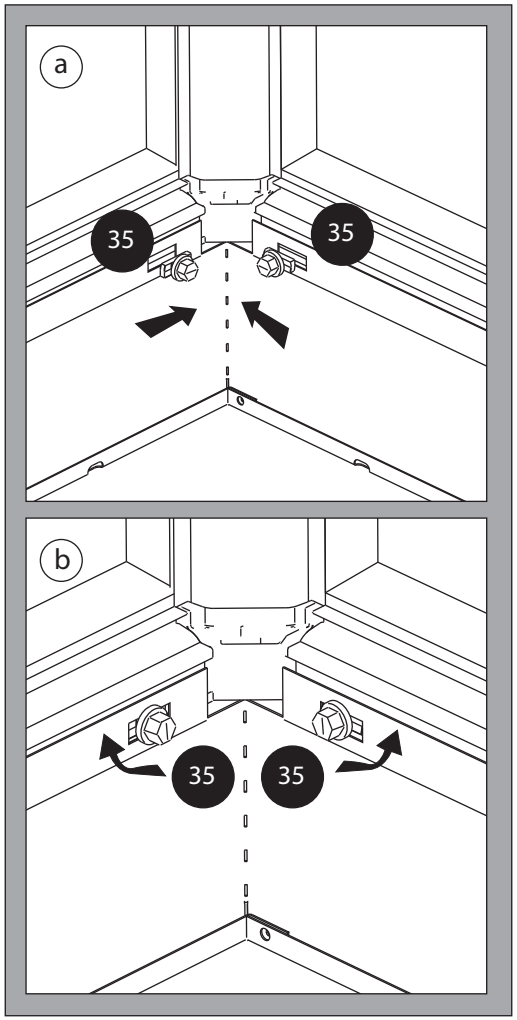


| | |
|---|---|
| **35** | x 28 |

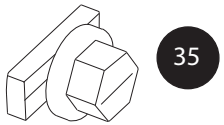

35